THE CITY OF WEST JORDAN, UTAH

A Municipal Corporation

RESOLUTION NO. 19-196

RESOLUTION 19-196, A RESOLUTION APPROVING UPDATES AND REVISIONS TO THE "ROAD AND BRIDGE STANDARDS AND SPECIFICATIONS"

WHEREAS, the City Council intends to approve updates and revisions to the "Road and Bridge Standards and Specifications," as recommended by the City Engineer and the City's Traffic Engineer, and other City staff; and

NOW, THEREFORE, IT IS RESOLVED BY THE CITY COUNCIL OF THE CITY OF WEST JORDAN, UTAH, THAT:

1. The City Council hereby approves the attached updates and revisions to the "Road and Bridge Standards and Specifications"; and

2. The City Council hereby directs the City Manager to implement these changes.

Adopted by the City Council of West Jordan, Utah, this 19th day of November 2019.

JIM RIDING
Mayor

ATTEST:

JAMIE BROOKS
Interim City Clerk/Recorder

CITY OF WEST JORDAN SEAL STATE OF UTAH

Voting by the City Council:

	"YES"	"NO"
Council Member Alan Anderson	✓	
Council Member Dirk Burton	✓	
Council Member Zach Jacob	✓	
Council Member Chad Lamb	✓	
Council Member Chris McConnehey	✓	
Council Member Kayleen Whitelock	✓	
Mayor Jim Riding	✓	

THE CITY OF WEST JORDAN, UTAH

ORDINANCE NO. 22-11

AN ORDINANCE APPROVING CITY ENGINEERING STANDARDS ADDITIONS REGARDING NARROW TRENCH EXCAVATION

WHEREAS, the City of West Jordan ("**City**") adopted West Jordan City Code ("**City Code**") in 2009, and has adopted the West Jordan City Public Improvement Standards, Specifications, and Plans ("**City Engineering Standards**"); and

WHEREAS, the City Council of the City ("**City Council**") desires to approve adding certain standards detail pages to the City Engineering Standards, regarding Narrow Trench Excavation, including pages RD-176, asphalt; RD-177, curb and gutter seam; and RD-178, softscape microproducts ("**proposed City Engineering Standards additions**"); and

WHEREAS, the Planning Commission of the City ("**Planning Commission**") did not need to hold a public meeting or public hearing regarding the proposed City Engineering Standards additions, since the proposed City Engineering Standards additions are not land use regulations, pursuant to Utah Code Ann. Section 10-9a-103(33)(c)(ii), because they are "*temporary* revisions to engineering specifications", which will be codified as land use regulations in the near future, as part of a general update of the City Engineering Standards; and

WHEREAS, the City Council held public meetings on March 23, 2022 and April 13, 2022 regarding the proposed City Engineering Standards additions; and

WHEREAS, the City Council finds it to be in the best interest of the public health, safety, and welfare of the residents of the City to adopt the attached proposed City Engineering Standards additions.

NOW THEREFORE, BE IT ORDAINED BY THE CITY COUNCIL OF THE CITY OF WEST JORDAN, UTAH AS FOLLOWS:

Section 1. Approval of proposed City Engineering Standards additions. The proposed City Engineering Standards additions are approved to read as shown on Attachment 1 below. City staff is directed to include the proposed City Engineering Standards additions in the next general update of the City Engineering Standards, to be approved as land use regulations.

Section 2. Severability. If any provision of this Ordinance is declared to be invalid by a court of competent jurisdiction, the remainder shall not be affected thereby.

Section 3. Effective Date. This Ordinance shall become effective immediately upon posting or publication as provided by law and upon (i) the Mayor signing the Ordinance, (ii) the City Council duly overriding the veto of the Mayor as provided by law, or (iii) the Mayor failing to sign or veto the Ordinance within fifteen (15) days after the City Council presents the Ordinance to the Mayor.

PASSED BY THE CITY COUNCIL OF THE CITY OF WEST JORDAN, UTAH, THIS 13TH DAY OF APRIL 2022.

(Continued on the next page)

CITY OF WEST JORDAN

By: Kayleen Whitelock
Kayleen Whitelock (Apr 14, 2022 18:30 MDT)

Kayleen Whitelock
Council Chair

ATTEST:

Cindy M. Quick, MMC
Council Office Clerk

Voting by the City Council	**"YES"**	**"NO"**
Council Chair Kayleen Whitelock	☒	☐
Council Vice-Chair Kelvin Green	☒	☐
Council Member Pamela Bloom	☒	☐
Council Member Zach Jacob	☒	☐
Council Member Christopher McConnehey	~ absent ~	
Council Member David Pack	☒	☐
Council Member Melissa Worthen	☒	☐

PRESENTED TO THE MAYOR BY THE CITY COUNCIL ON APRIL 14, 2022

Mayor's Action: X Approve _____ Veto

By: _____ Apr 15, 2022
Mayor Dirk Burton Date

ATTEST:

Tangee Sloan
City Recorder

STATEMENT OF APPROVAL OF PASSAGE (check one)

X The Mayor approved and signed Ordinance No. 22-11.

_____ The Mayor vetoed Ordinance No. 22-11 on _____ and the City Council timely overrode the veto of the Mayor by a vote of _____ to _____.

_____ Ordinance No. 22-11 became effective by operation of law without the Mayor's approval or disapproval.

Tangee Sloan
City Recorder

APPENDIX A

STANDARD DRAWINGS FOR ROAD & BRIDGE

TABLE OF CONTENTS

Standard Drawing #	Description
	General
RD-005	Abbreviations & Symbols (Roadways)
RD-010	Abbreviation & Symbols (Storm Drain, Sewer, Water)
	General Road Information
RD-15	Arterial Road Cross Section (Existing as of November 2006) 7-Lane Arterial
RD-20	Arteral Street Cross Section (Typical) 5-Lane Arterial
RD-25	Collector Cross Section – 2 Lane 70'
RD-30	Collector Cross Section – 3 Lane 80'
RD-40	Local Street Cross Section – 50'
RD-70	Cul-de-Sac
RD-71	Temporary Emergency Vehicle Turn-around
RD-75	Road Intersection "L" Shape
	Design
RD-85	Stopping Sight Distance Requirements at Intersections & Driveways
RD-86	Asphalt Speed Table Detail
RD-87	Concrete Neighborhood Speed Table
RD-90	Asphalt Overlay
RD-91	Asphalt Overlay
RD-92	Asphalt Overlay
	Design
RD-100	Standard Curb & Gutter
RD-105	Standard Curb – Median
RD-106	Concrete Curb Wall for Pavement Edge
RD-107	Plowable End Section
RD-108	Plowable End Section
RD-109	Refuge Island
RD-110	Standard Waterway Transition
RD-115	Standard Waterway
	Driveways
RD-120	Standard Drive Approach
RD-121	Typical Driveway Access to Private Gated Community with External Mailbox Area

RD-122	Typical Driveway Access to Private Gated Community without External Mailbox Area
RD-125	Saw-Cut Drive Approach
RD-130	Open Drive Approach
	Park Strips
RD-140	Standard Concrete Park Strip
	Miscellaneous
RD-155	Location of Fire Hydrant within Retaining Wall
RD-165	Safety Post
	Road Repair
RD-170	Asphalt Pavement Tie-In
RD-175	Standard Trench Excavation Restoration
RD-180	Defective Concrete
RD-185	Remove & Replace Curb & Cutter without Pavement Tie-In
RD-195	Standard Trench Plating Detail
	Sidewalk
RD-200	Standard Sidewalk
	Streetlights
RD-215	Collector & Arterial Streetlight
RD-225	Residential Streetlight
RD-235	Arterial/Collector Pole Foundation
RD-240	Junction Box
	Street Signs
RD-250	Standard Street Sign
RD-255	Traffic Control Sign
RD-256	Temporary End of Road Sign Detail
	Survey Monumentation
RD-260	Survey Monumentation – Centerline Survey Monument
RD-265	Survey Monumentation – Corner & Boundary Markers
RD-270	New Installation – Subdivision – Duct Bank Standard
RD-273	Utility Location Requirements
RD-290	Single Land Roundabout

* * *

SYMBOLS	DEFINITIONS
	SECTION LINE
	CENTER LINE
15+00	CONSTRUCTION CENTER LINE
	PROPERTY OR R/W LINE
	EASEMENT LINE
	MONUMENT LINE
	FENCE
4250	CONTOUR LINE (FG)
4250.0	CONTOUR ELEVATION (FG)
	BANK SLOPES
SD 10"	STORM DRAIN LINE
CW 12"	CULINARY WATER LINE
SW 24"	SECONDARY WATER LINE
G 6"	GAS LINE
T 4"	TELEPHONE CABLE
E	ELECTRIC CABLE
SS 21"	SANITARY SEWER LINE
	ASPHALT PAVING
	FIRE HYDRANT
	WATER VALVE
WM	WATER METER
MH	MANHOLE
CB	CATCH BASIN
COB	CLEAN OUT BOX
	POLE & ANCHOR
	STREET LIGHT
	UNDISTURBED EARTH
	STRUCTURE
	GAS METER
TS	TRAFFIC SIGNAL LIGHT
	SINGLE GUTTER

SYMBOLS	DEFINITIONS
	VALLEY GUTTER
	SINGLE CURB
	CURB & GUTTER
	SIDEWALK
	RAILROAD TRACKS
	GUARD RAIL
	OPEN DITCH, CANAL
	CULVERT
	SECTION CORNER
	SOIL BORING
	MONUMENT
BM NO. 46 ELEV. 4256.50	BENCH MARK
	SIGN
PP	POWER POLE
TP	TELEPHONE POLE
	DECIDUOUS TREE
	CONIFEROUS TREE
	P.I.
	P.C. OR P.T.
	CONCRETE PVMT. SECTION
	SUBGRADE SEAL SECTION
	SELECT MATERIAL SECTION
	AGGREGATE BASE SECTION
	BITUMINOUS PVMT. SECTION
	OBLITERATE PAVEMENT
	CONCRETE PAVEMENT
	BITUMINOUS PAVEMENT
	PROFILE
	GROUND PROFILE
ROUND ARCH BOX	CULVERT
	P.V.I.
	P.V.C. OR P.V.T.
	GROUNDWATER ELEVATION

DRAWING UPDATED MAY 2014

City of West Jordan, Utah

WEST JORDAN UTAH

ABBREVIATIONS AND SYMBOLS ROADWAYS

PLAN

RD 5

STORM DRAIN, SEWER, WATER

ABBREVIATIONS

C.I.P. = CAST IRON PIPE
D.I.P. = DUCTILE IRON PIPE
PVC = POLYVINYL CHLORIDE
MJ = MECHANICAL JOINT
T.J. = TYTON JOINT
O.B. = OPEN BELL
L.B. = LARGE BELL
WOV = WASH OUT VALVE
VAL. = VALVE
HYD. = HYDRANT
REG. = REGULATOR
BD. = BEND
EXT. = EXTEND
RED. = REDUCER
FLG. = FLANGED
ASSY. = ASSEMBLY
M.W. = MANWAY
MH = MANHOLE
SPIG. = SPIGOT
ADPT. = ADAPTOR
TBC. = TOP BACK OF CURB
F.C. = FACE OF CURB
P.C.C.P. = PRE STRESSED CONCRETE CYLINDER PIPE
C.M.P. CAS. = CORRUGATED METAL PIPE CASING
A.A.V.V. = AUTOMATIC AIR RELEASE VALVE
A.C.A.R.V. = AUTOMATIC COMBINATION AIR RELEASE VALVE
ASPH. = ASPHALT
A.C. = ASPHALTIC CONCRETE
CONC. = CONCRETE
GALV. = GALVINIZED IRON
COP. = COPPER
PRV. = PRESSURE REDUCING VALVE
GV. = GATE VALVE
BFV. = BUTTERFLY VALVE
WOV. = WASH OUT VALVE

SYMBOLS / DEFINITIONS

SYMBOLS	DEFINITIONS
PL PL	PROPERTY LINES (100' MAP, DESIGN DRAWINGS)
	WATER MAIN TEE
	WATER MAIN CROSS
	REDUCER
	REGULATOR
	TAPPING SLEEVE AND VALVE
	PLUG AND CLAMP
	CONCRETE THRUST BLOCK
	PIPE OVER
	PIPE UNDER
	BYPASS
	RUN-AROUND
	CIRCLED VALVE – (SYSTEM NORMALLY CLOSED)
	OFFSET OR VERTICAL BENDS
	WASH OUT VALVE
	GATE VALVE
	BUTTERFLY VALVE
	AIR RELEASE VALVES
DRN	MANUAL DRAIN VALVE
PRV	PRESSURE REDUCING VALVE
	SEWER CLEANOUT

TYPICAL SECTION

7 LANE ARTERIAL ROADWAY

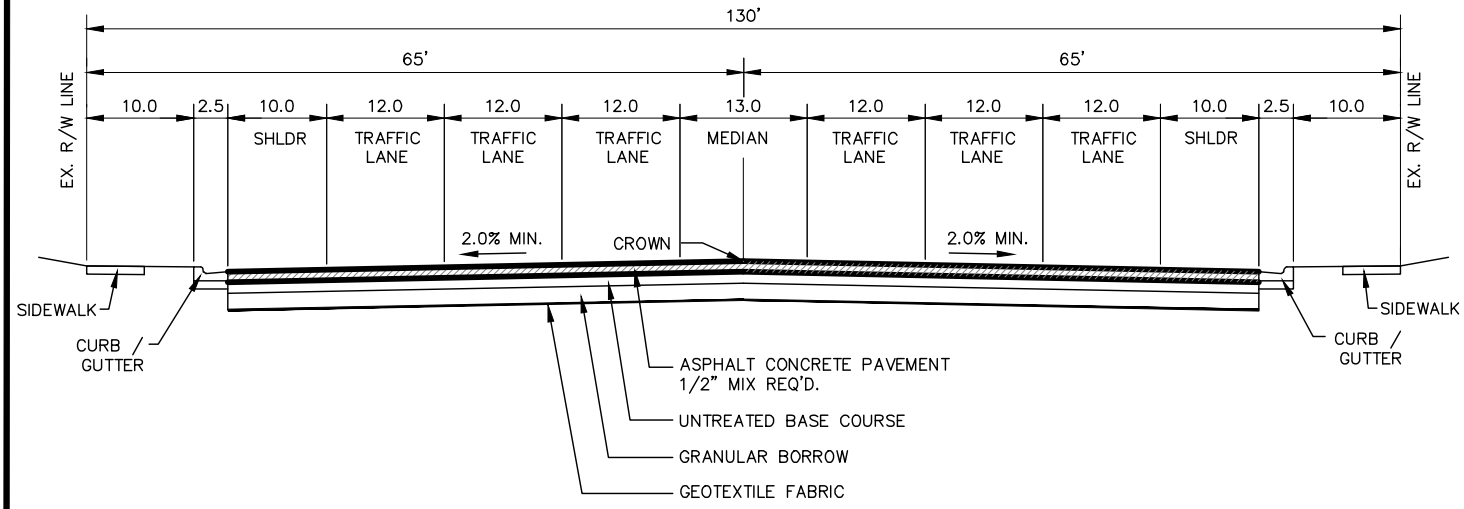

ROADWAY CROSS SECTION NOTES

1. ASPHALT PAVEMENT: CONTRACTOR SHALL USE PG64-34 SP-1/2 PER APWA 32 12 05. RAP SHALL BE NO MORE THAN 15 PERCENT OF THE MIX. MIX DESIGN SHALL BE APPROVED BY THE CITY PRIOR TO INSTALLATION. INSTALL ASPHALT PAVEMENT PER APWA 32 12 16.13 IN LIFTS THAT DO NOT EXCEED THREE INCHES. INSTALL FINAL LIFT NOT LESS THAN 2 TIMES THE THE DIAMETER OF THE MAXIMUM AGGREGATE PARTICLE SIZE. COMPACT TO 94 PERCENT OF ASTM D2041 (RICE METHOD) PLUS OR MINUS TWO PERCENT.

2. TACK COAT: CLEAN AND TACK ALL VERTICAL SURFACES ADJACENT TO THE PLACEMENT OF NEW ASPHALT PAVEMENT. APPLY FULL COVERAGE SURFACE TACK COAT BETWEEN LIFTS IF LOWER LIFT IS LEFT UNPAVED LONGER THAN 24 HOURS OR IF IT BECOMES UNCLEAN.

3. ASPHALT PAVEMENT JOINTS: ASPHALT PAVEMENT LONGITUDINAL JOINTS SHALL BE PLACED 1 FOOT OF THE CENTER LANE OR WITHIN 1 FOOT OF A PAINTED LANE STRIP. OFFSET LONGITUDINAL JOINTS 12 INCHES IN SUCCEEDING COURSES.

4. TEMPORARY ASPHALT: ASPHALT PAVEMENT PLACED AFTER NOVEMBER 1 AND BEFORE APRIL 1 WILL BE CONSIDERED TEMPORARY ASPHALT AND MUST BE REPLACED WHEN THE AIR TEMPERATURE IN THE SHADE AND THE ROADWAY SURFACE TEMPERATURE ARE ABOVE 50° F.

5. PAVEMENT MARKINGS: ALL PAVEMENT LONGITUDINAL MARKINGS SHALL BE ALKYD RESIN PAINT AND SHALL BE APPLIED IN ACCORDANCE WITH UDOT STANDARD SPECIFICATION 02765 AND 02768. LEGENDS, SYMBOLS, STOP BARS AND CROSS WALKS SHALL BE PREFORMED THERMOPLASTIC HEAT FUSED TAPE.

6. UNTREATED BASE COURSE: AGGREGATE CLASS "A" UNTREATED BASE COURSE MATERIAL AS SPECIFIED IN APWA SECTION 32 11 23. PLACE MATERIAL PER APWA SECTION 32 05 10. COMPACT AS SPECIFIED IN APWA SECTION 31 23 26 TO A MODIFIED PROCTOR DENSITY OF 95 PERCENT OR GREATER IN LIFTS NOT EXCEEDING 6 INCHES THICK AFTER COMPACTION.

7. GRANULAR BORROW: MATERIAL SHALL BE AN A-1-a BORROW MATERIAL (ASTM D3282) THAT IS NON PLASTIC AND WELL GRADED. MATERIAL SHALL NOT BE LARGER THAN 2 INCHES IN DIAMETER. MAXIMUM AMOUNT OF MATERIAL PASSING THE 200 SIEVE SHALL NOT EXCEED 15 PERCENT. PLACE MATERIAL PER APWA SECTION 32 05 10. COMPACT AS SPECIFIED IN APWA SECTION 31 23 26 TO A MODIFIED PROCTOR DENSITY OF 95 PERCENT IN LIFTS NOT EXCEEDING 6 INCHES THICK AFTER COMPACTION.

8. GEOTEXTILE FABRIC: ALL ARTERIAL ROADWAYS SHALL INCLUDE AN APPROVED GEOTEXTILE SEPARATION FABRIC PLACED BETWEEN THE NATURAL SUBGRADE OF THE ROADWAY AND THE IMPORTED GRANULAR BORROW LAYER. GEOTEXTILE SHALL BE PLACED ACCORDING TO APWA SECTION 31 05 19.

9. SUBGRADE: PROTECT SUBGRADE FROM FLOODING, FREEZING, OR DESICCATION. BEFORE BACKFILLING OVER SUBGRADE GET INSPECTORS REVIEW OF SUBGRADE PREPARATION.

10. SOFT SPOT REPAIR: IF SUBGRADE CANNOT PASS A PROOF ROLL TEST, REMOVE UNSTABLE MATERIAL TO REQUIRED DEPTH, VERIFY UNDISTURBED SUBGRADE MATERIAL IS ADEQUATE TO SUPPORT STABILIZATION MATERIAL. PLACE ADDITIONAL GEOTEXTILE FABRIC AND INSTALL ADDITIONAL GRANULAR BORROW IN LIFTS NOT TO EXCEED 6 INCHES AFTER COMPACTION. COMPACT PER APWA SECTION 31 23 26.

TYPICAL SECTION

5 LANE ARTERIAL ROADWAY

NEW CONSTRUCTION

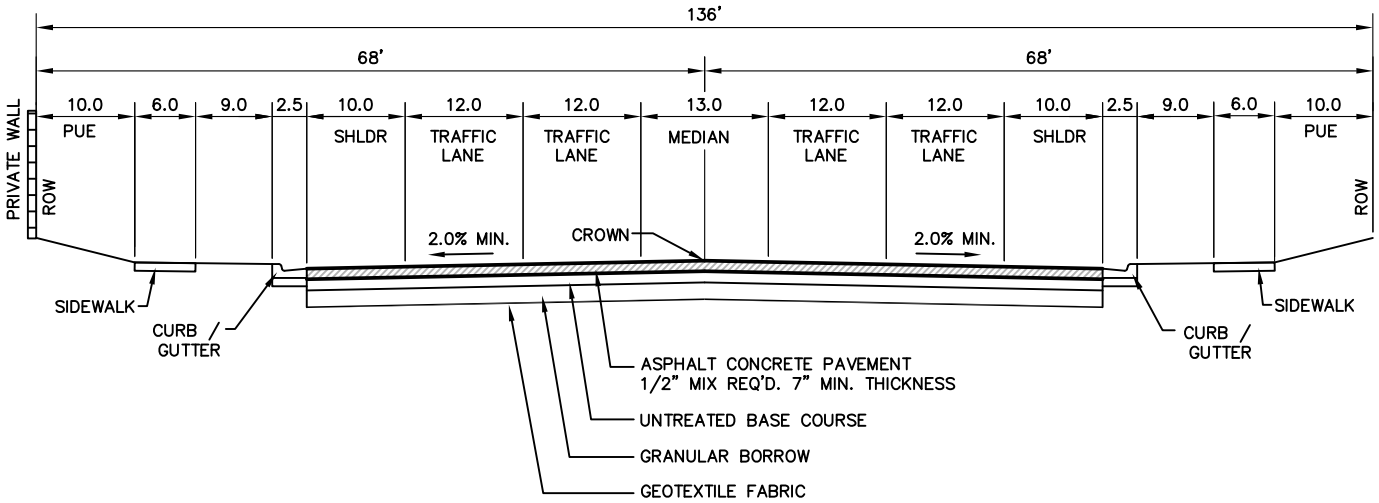

ROADWAY CROSS SECTION NOTES

1. ASPHALT PAVEMENT: CONTRACTOR SHALL USE PG64–34 SP–1/2 PER APWA 32 12 05. RAP SHALL BE NO MORE THAN 15 PERCENT OF THE MIX. MIX DESIGN SHALL BE APPROVED BY THE CITY PRIOR TO INSTALLATION. INSTALL ASPHALT PAVEMENT PER APWA 32 12 16.13 IN LIFTS THAT DO NOT EXCEED THREE INCHES. INSTALL FINAL LIFT NOT LESS THAN 2 TIMES THE THE DIAMETER OF THE MAXIMUM AGGREGATE PARTICLE SIZE. COMPACT TO 94 PERCENT OF ASTM D2041 (RICE METHOD) PLUS OR MINUS TWO PERCENT.

2. TACK COAT: CLEAN AND TACK ALL VERTICAL SURFACES ADJACENT TO THE PLACEMENT OF NEW ASPHALT PAVEMENT. APPLY FULL COVERAGE SURFACE TACK COAT BETWEEN LIFTS IF LOWER LIFT IS LEFT UNPAVED LONGER THAN 24 HOURS OR IF IT BECOMES UNCLEAN.

3. ASPHALT PAVEMENT JOINTS: ASPHALT PAVEMENT LONGITUDINAL JOINTS SHALL BE PLACED 1 FOOT OF THE CENTER LANE OR WITHIN 1 FOOT OF A PAINTED LANE STRIP. OFFSET LONGITUDINAL JOINTS 12 INCHES IN SUCCEEDING COURSES.

4. TEMPORARY ASPHALT: ASPHALT PAVEMENT PLACED AFTER NOVEMBER 1 AND BEFORE APRIL 1 WILL BE CONSIDERED TEMPORARY ASPHALT AND MUST BE REPLACED WHEN THE AIR TEMPERATURE IN THE SHADE AND THE ROADWAY SURFACE TEMPERATURE ARE ABOVE 50° F.

5. PAVEMENT MARKINGS: ALL PAVEMENT LONGITUDINAL MARKINGS SHALL BE ALKYD RESIN PAINT AND SHALL BE APPLIED IN ACCORDANCE WITH UDOT STANDARD SPECIFICATION 02765 AND 02768. LEGENDS, SYMBOLS, STOP BARS AND CROSS WALKS SHALL BE PREFORMED THERMOPLASTIC HEAT FUSED TAPE.

6. UNTREATED BASE COURSE: AGGREGATE CLASS "A" UNTREATED BASE COURSE MATERIAL AS SPECIFIED IN APWA SECTION 32 11 23. PLACE MATERIAL PER APWA SECTION 32 05 10. COMPACT AS SPECIFIED IN APWA SECTION 31 23 26 TO A MODIFIED PROCTOR DENSITY OF 95 PERCENT OR GREATER IN LIFTS NOT EXCEEDING 6 INCHES THICK AFTER COMPACTION.

7. GRANULAR BORROW: MATERIAL SHALL BE AN A–1–a BORROW MATERIAL (ASTM D3282) THAT IS NON PLASTIC AND WELL GRADED. MATERIAL SHALL NOT BE LARGER THAN 2 INCHES IN DIAMETER. MAXIMUM AMOUNT OF MATERIAL PASSING THE 200 SIEVE SHALL NOT EXCEED 15 PERCENT. PLACE MATERIAL PER APWA SECTION 32 05 10. COMPACT AS SPECIFIED IN APWA SECTION 31 23 26 TO A MODIFIED PROCTOR DENSITY OF 95 PERCENT IN LIFTS NOT EXCEEDING 6 INCHES THICK AFTER COMPACTION.

8. GEOTEXTILE FABRIC: ALL ARTERIAL ROADWAYS SHALL INCLUDE AN APPROVED GEOTEXTILE SEPARATION FABRIC PLACED BETWEEN THE NATURAL SUBGRADE OF THE ROADWAY AND THE IMPORTED GRANULAR BORROW LAYER. GEOTEXTILE SHALL BE PLACED ACCORDING TO APWA SECTION 31 05 19.

9. SUBGRADE: PROTECT SUBGRADE FROM FLOODING, FREEZING, OR DESICCATION. BEFORE BACKFILLING OVER SUBGRADE GET INSPECTORS REVIEW OF SUBGRADE PREPARATION.

10. SOFT SPOT REPAIR: IF SUBGRADE CANNOT PASS A PROOF ROLL TEST, REMOVE UNSTABLE MATERIAL TO REQUIRED DEPTH, VERIFY UNDISTURBED SUBGRADE MATERIAL IS ADEQUATE TO SUPPORT STABILIZATION MATERIAL. PLACE ADDITIONAL GEOTEXTILE FABRIC AND INSTALL ADDITIONAL GRANULAR BORROW IN LIFTS NOT TO EXCEED 6 INCHES AFTER COMPACTION. COMPACT PER APWA SECTION 31 23 26.

TYPICAL SECTION

70' ROW COLLECTOR

NEW NEIGHBORHOOD

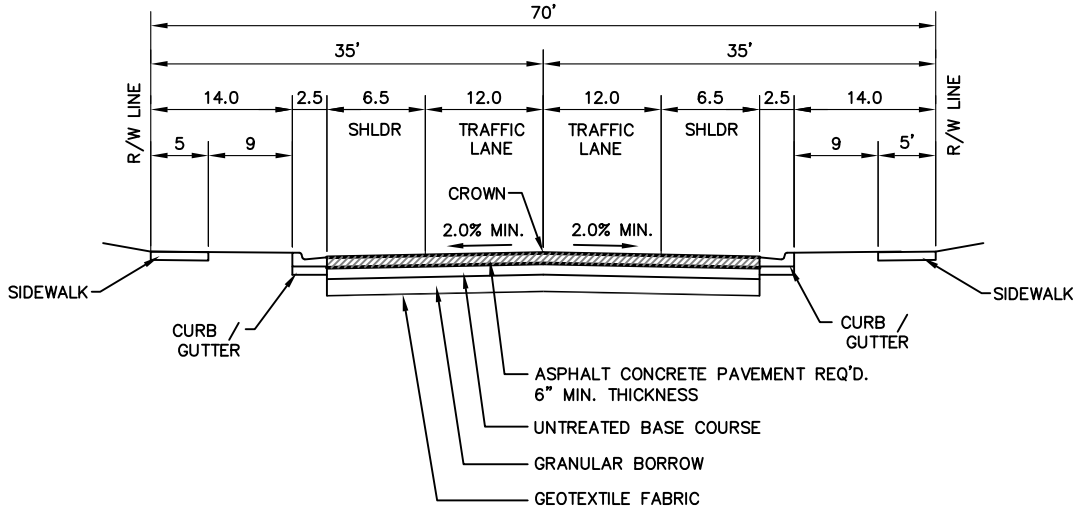

ROADWAY CROSS SECTION NOTES

1. ASPHALT PAVEMENT: CONTRACTOR SHALL USE PG64–34 SP–1/2 PER APWA 32 12 05. RAP SHALL BE NO MORE THAN 15 PERCENT OF THE MIX. MIX DESIGN SHALL BE APPROVED BY THE CITY PRIOR TO INSTALLATION. INSTALL ASPHALT PAVEMENT PER APWA 32 12 16.13 IN LIFTS THAT DO NOT EXCEED THREE INCHES. INSTALL FINAL LIFT NOT LESS THAN 2 TIMES THE THE DIAMETER OF THE MAXIMUM AGGREGATE PARTICLE SIZE. COMPACT TO 94 PERCENT OF ASTM D2041 (RICE METHOD) PLUS OR MINUS TWO PERCENT.

2. TACK COAT: CLEAN AND TACK ALL VERTICAL SURFACES ADJACENT TO THE PLACEMENT OF NEW ASPHALT PAVEMENT. APPLY FULL COVERAGE SURFACE TACK COAT BETWEEN LIFTS IF LOWER LIFT IS LEFT UNPAVED LONGER THAN 24 HOURS OR IF IT BECOMES UNCLEAN.

3. ASPHALT PAVEMENT JOINTS: ASPHALT PAVEMENT LONGITUDINAL JOINTS SHALL BE PLACED 1 FOOT OF THE CENTER LANE OR WITHIN 1 FOOT OF A PAINTED LANE STRIP. OFFSET LONGITUDINAL JOINTS 12 INCHES IN SUCCEEDING COURSES.

4. TEMPORARY ASPHALT: ASPHALT PAVEMENT PLACED AFTER NOVEMBER 1 AND BEFORE APRIL 1 WILL BE CONSIDERED TEMPORARY ASPHALT AND MUST BE REPLACED WHEN THE AIR TEMPERATURE IN THE SHADE AND THE ROADWAY SURFACE TEMPERATURE ARE ABOVE 50° F.

5. PAVEMENT MARKINGS: ALL PAVEMENT LONGITUDINAL MARKINGS SHALL BE ALKYD RESIN PAINT AND SHALL BE APPLIED IN ACCORDANCE WITH UDOT STANDARD SPECIFICATION 02765 AND 02768. LEGENDS, SYMBOLS, STOP BARS AND CROSS WALKS SHALL BE PREFORMED THERMOPLASTIC HEAT FUSED TAPE.

6. UNTREATED BASE COURSE: AGGREGATE CLASS "A" UNTREATED BASE COURSE MATERIAL AS SPECIFIED IN APWA SECTION 32 11 23. PLACE MATERIAL PER APWA SECTION 32 05 10. COMPACT AS SPECIFIED IN APWA SECTION 31 23 26 TO A MODIFIED PROCTOR DENSITY OF 95 PERCENT OR GREATER IN LIFTS NOT EXCEEDING 6 INCHES THICK AFTER COMPACTION.

7. GRANULAR BORROW: MATERIAL SHALL BE AN A–1–a BORROW MATERIAL (ASTM D3282) THAT IS NON PLASTIC AND WELL GRADED. MATERIAL SHALL NOT BE LARGER THAN 2 INCHES IN DIAMETER. MAXIMUM AMOUNT OF MATERIAL PASSING THE 200 SIEVE SHALL NOT EXCEED 15 PERCENT. PLACE MATERIAL PER APWA SECTION 32 05 10. COMPACT AS SPECIFIED IN APWA SECTION 31 23 26 TO A MODIFIED PROCTOR DENSITY OF 95 PERCENT IN LIFTS NOT EXCEEDING 6 INCHES THICK AFTER COMPACTION.

8. GEOTEXTILE FABRIC: ALL COLLECTOR ROADWAYS SHALL INCLUDE AN APPROVED GEOTEXTILE SEPARATION FABRIC PLACED BETWEEN THE NATURAL SUBGRADE OF THE ROADWAY AND THE IMPORTED GRANULAR BORROW LAYER. GEOTEXTILE SHALL BE PLACED ACCORDING TO APWA SECTION 31 05 19.

9. SUBGRADE: PROTECT SUBGRADE FROM FLOODING, FREEZING, OR DESICCATION. BEFORE BACKFILLING OVER SUBGRADE GET INSPECTORS REVIEW OF SUBGRADE PREPARATION.

10. SOFT SPOT REPAIR: IF SUBGRADE CANNOT PASS A PROOF ROLL TEST, REMOVE UNSTABLE MATERIAL TO REQUIRED DEPTH, VERIFY UNDISTURBED SUBGRADE MATERIAL IS ADEQUATE TO SUPPORT STABILIZATION MATERIAL. PLACE ADDITIONAL GEOTEXTILE FABRIC AND INSTALL ADDITIONAL GRANULAR BORROW IN LIFTS NOT TO EXCEED 6 INCHES AFTER COMPACTION. COMPACT PER APWA SECTION 31 23 26.

TYPICAL SECTION

80' ROW COLLECTOR

EXISTING STREETS

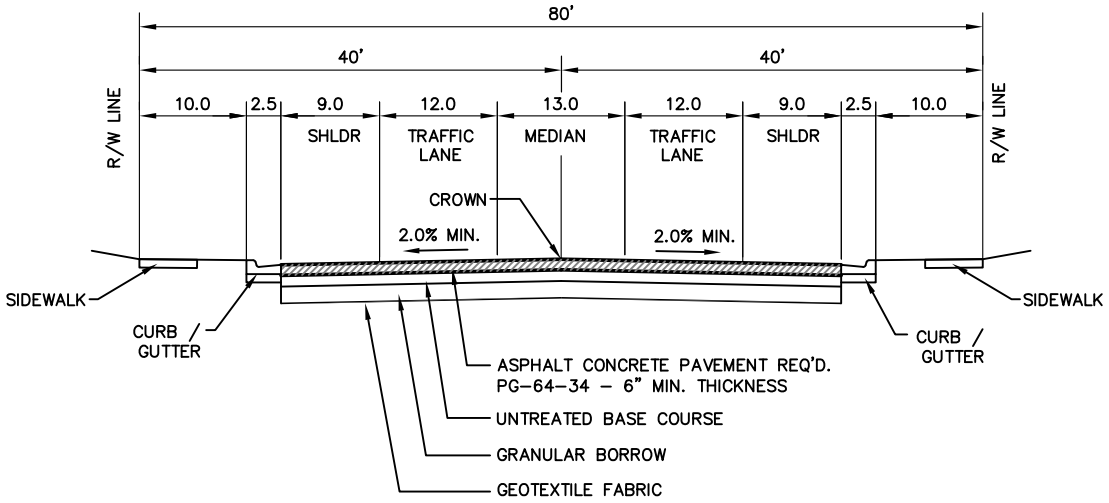

ROADWAY CROSS SECTION NOTES

1. ASPHALT PAVEMENT: CONTRACTOR SHALL USE PG64-34 SP-1/2 PER APWA 32 12 05. RAP SHALL BE NO MORE THAN 15 PERCENT OF THE MIX. MIX DESIGN SHALL BE APPROVED BY THE CITY PRIOR TO INSTALLATION. INSTALL ASPHALT PAVEMENT PER APWA 32 12 16.13 IN LIFTS THAT DO NOT EXCEED THREE INCHES. INSTALL FINAL LIFT NOT LESS THAN 2 TIMES THE THE DIAMETER OF THE MAXIMUM AGGREGATE PARTICLE SIZE. COMPACT TO 94 PERCENT OF ASTM D2041 (RICE METHOD) PLUS OR MINUS TWO PERCENT.

2. TACK COAT: CLEAN AND TACK ALL VERTICAL SURFACES ADJACENT TO THE PLACEMENT OF NEW ASPHALT PAVEMENT. APPLY FULL COVERAGE SURFACE TACK COAT BETWEEN LIFTS IF LOWER LIFT IS LEFT UNPAVED LONGER THAN 24 HOURS OR IF IT BECOMES UNCLEAN.

3. ASPHALT PAVEMENT JOINTS: ASPHALT PAVEMENT LONGITUDINAL JOINTS SHALL BE PLACED 1 FOOT OF THE CENTER LANE OR WITHIN 1 FOOT OF A PAINTED LANE STRIP. OFFSET LONGITUDINAL JOINTS 12 INCHES IN SUCCEEDING COURSES.

4. TEMPORARY ASPHALT: ASPHALT PAVEMENT PLACED AFTER NOVEMBER 1 AND BEFORE APRIL 1 WILL BE CONSIDERED TEMPORARY ASPHALT AND MUST BE REPLACED WHEN THE AIR TEMPERATURE IN THE SHADE AND THE ROADWAY SURFACE TEMPERATURE ARE ABOVE 50° F.

5. PAVEMENT MARKINGS: ALL PAVEMENT LONGITUDINAL MARKINGS SHALL BE ALKYD RESIN PAINT AND SHALL BE APPLIED IN ACCORDANCE WITH UDOT STANDARD SPECIFICATION 02765 AND 02768. LEGENDS, SYMBOLS, STOP BARS AND CROSS WALKS SHALL BE PREFORMED THERMOPLASTIC HEAT FUSED TAPE.

6. UNTREATED BASE COURSE: AGGREGATE CLASS "A" UNTREATED BASE COURSE MATERIAL AS SPECIFIED IN APWA SECTION 32 11 23. PLACE MATERIAL PER APWA SECTION 32 05 10. COMPACT AS SPECIFIED IN APWA SECTION 31 23 26 TO A MODIFIED PROCTOR DENSITY OF 95 PERCENT OR GREATER IN LIFTS NOT EXCEEDING 6 INCHES THICK AFTER COMPACTION.

7. GRANULAR BORROW: MATERIAL SHALL BE AN A-1-a BORROW MATERIAL (ASTM D3282) THAT IS NON PLASTIC AND WELL GRADED. MATERIAL SHALL NOT BE LARGER THAN 2 INCHES IN DIAMETER. MAXIMUM AMOUNT OF MATERIAL PASSING THE 200 SIEVE SHALL NOT EXCEED 15 PERCENT. PLACE MATERIAL PER APWA SECTION 32 05 10. COMPACT AS SPECIFIED IN APWA SECTION 31 23 26 TO A MODIFIED PROCTOR DENSITY OF 95 PERCENT IN LIFTS NOT EXCEEDING 6 INCHES THICK AFTER COMPACTION.

8. GEOTEXTILE FABRIC: ALL COLLECTOR ROADWAYS SHALL INCLUDE AN APPROVED GEOTEXTILE SEPARATION FABRIC PLACED BETWEEN THE NATURAL SUBGRADE OF THE ROADWAY AND THE IMPORTED GRANULAR BORROW LAYER. GEOTEXTILE SHALL BE PLACED ACCORDING TO APWA SECTION 31 05 19.

9. SUBGRADE: PROTECT SUBGRADE FROM FLOODING, FREEZING, OR DESICCATION. BEFORE BACKFILLING OVER SUBGRADE GET INSPECTORS REVIEW OF SUBGRADE PREPARATION.

10. SOFT SPOT REPAIR: IF SUBGRADE CANNOT PASS A PROOF ROLL TEST, REMOVE UNSTABLE MATERIAL TO REQUIRED DEPTH, VERIFY UNDISTURBED SUBGRADE MATERIAL IS ADEQUATE TO SUPPORT STABILIZATION MATERIAL. PLACE ADDITIONAL GEOTEXTILE FABRIC AND INSTALL ADDITIONAL GRANULAR BORROW IN LIFTS NOT TO EXCEED 6 INCHES AFTER COMPACTION. COMPACT PER APWA SECTION 31 23 26.

TYPICAL SECTION

50' ROW LOCAL

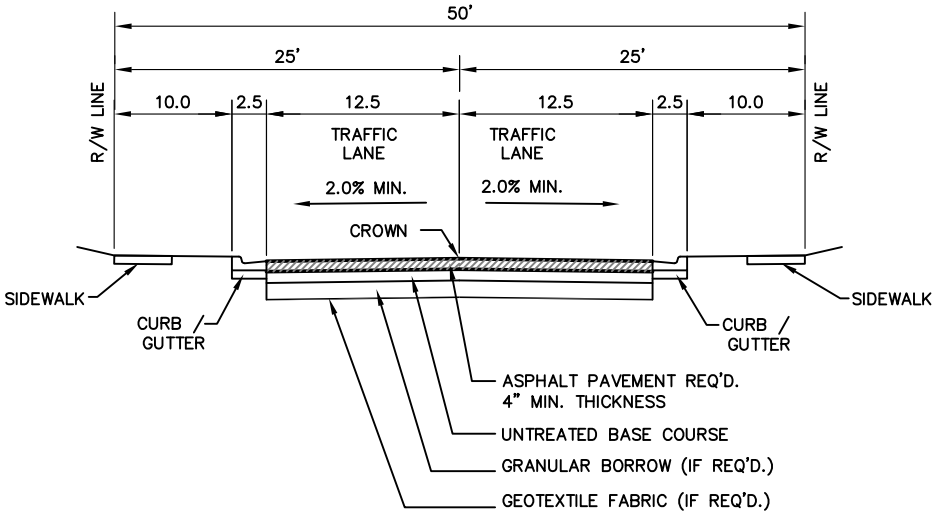

ROADWAY CROSS SECTION NOTES

1. ASPHALT PAVEMENT: CONTRACTOR SHALL USE PG64–34 DM–1/2 PER APWA 32 12 05. RAP SHALL BE NO MORE THAN 15 PERCENT OF THE MIX. MIX DESIGN SHALL BE APPROVED BY THE CITY PRIOR TO INSTALLATION. INSTALL ASPHALT PAVEMENT PER APWA 32 12 16.13 IN LIFTS THAT DO NOT EXCEED THREE INCHES. INSTALL FINAL LIFT NOT LESS THAN 2 TIMES THE THE DIAMETER OF THE MAXIMUM AGGREGATE PARTICLE SIZE. COMPACT TO 94 PERCENT OF ASTM D2041 (RICE METHOD) PLUS OR MINUS TWO PERCENT.
2. TACK COAT: CLEAN AND TACK ALL VERTICAL SURFACES ADJACENT TO THE PLACEMENT OF NEW ASPHALT PAVEMENT. APPLY FULL COVERAGE SURFACE TACK COAT BETWEEN LIFTS IF LOWER LIFT IS LEFT UNPAVED LONGER THAN 24 HOURS OR IF IT BECOMES UNCLEAN.
3. ASPHALT PAVEMENT JOINTS: ASPHALT PAVEMENT LONGITUDINAL JOINTS SHALL BE PLACED 1 FOOT OF THE CENTER LANE OR WITHIN 1 FOOT OF A PAINTED LANE STRIP. OFFSET LONGITUDINAL JOINTS 12 INCHES IN SUCCEEDING COURSES.
4. TEMPORARY ASPHALT: ASPHALT PAVEMENT PLACED AFTER NOVEMBER 1 AND BEFORE APRIL 1 WILL BE CONSIDERED TEMPORARY ASPHALT AND MUST BE REPLACED WHEN THE AIR TEMPERATURE IN THE SHADE AND THE ROADWAY SURFACE TEMPERATURE ARE ABOVE 50° F.
5. PAVEMENT MARKINGS: ALL PAVEMENT LONGITUDINAL MARKINGS SHALL BE ALKYD RESIN PAINT AND SHALL BE APPLIED IN ACCORDANCE WITH UDOT STANDARD SPECIFICATION 02765 AND 02768. LEGENDS, SYMBOLS, STOP BARS AND CROSS WALKS SHALL BE PREFORMED THERMOPLASTIC HEAT FUSED TAPE.
6. UNTREATED BASE COURSE: AGGREGATE CLASS "A" UNTREATED BASE COURSE MATERIAL AS SPECIFIED IN APWA SECTION 32 11 23. PLACE MATERIAL PER APWA SECTION 32 05 10. COMPACT AS SPECIFIED IN APWA SECTION 31 23 26 TO A MODIFIED PROCTOR DENSITY OF 95 PERCENT OR GREATER IN LIFTS NOT EXCEEDING 6 INCHES THICK AFTER COMPACTION.
7. GRANULAR BORROW: MATERIAL SHALL BE AN A–1–a BORROW MATERIAL (ASTM D3282) THAT IS NON PLASTIC AND WELL GRADED. MATERIAL SHALL NOT BE LARGER THAN 2 INCHES IN DIAMETER. MAXIMUM AMOUNT OF MATERIAL PASSING THE 200 SIEVE SHALL NOT EXCEED 15 PERCENT. PLACE MATERIAL PER APWA SECTION 32 05 10. COMPACT AS SPECIFIED IN APWA SECTION 31 23 26 TO A MODIFIED PROCTOR DENSITY OF 95 PERCENT IN LIFTS NOT EXCEEDING 6 INCHES THICK AFTER COMPACTION.
8. GEOTEXTILE FABRIC: LOCAL ROADWAYS MAY INCLUDE AN GEOTEXTILE SEPARATION FABRIC PLACED BETWEEN THE NATURAL SUBGRADE OF THE ROADWAY AND THE IMPORTED GRANULAR BORROW LAYER IF REQUIRED BY A GEOTECNICAL REPORT. GEOTEXTILE SHALL BE PLACED ACCORDING TO APWA SECTION 31 05 19.
9. SUBGRADE: PROTECT SUBGRADE FROM FLOODING, FREEZING, OR DESICCATION. BEFORE BACKFILLING OVER SUBGRADE GET INSPECTORS REVIEW OF SUBGRADE PREPARATION.
10. SOFT SPOT REPAIR: IF SUBGRADE CANNOT PASS A PROOF ROLL TEST, REMOVE UNSTABLE MATERIAL TO REQUIRED DEPTH, VERIFY UNDISTURBED SUBGRADE MATERIAL IS ADEQUATE TO SUPPORT STABILIZATION MATERIAL. PLACE ADDITIONAL GEOTEXTILE FABRIC AND INSTALL ADDITIONAL GRANULAR BORROW IN LIFTS NOT TO EXCEED 6 INCHES AFTER COMPACTION. COMPACT PER APWA SECTION 31 23 26.

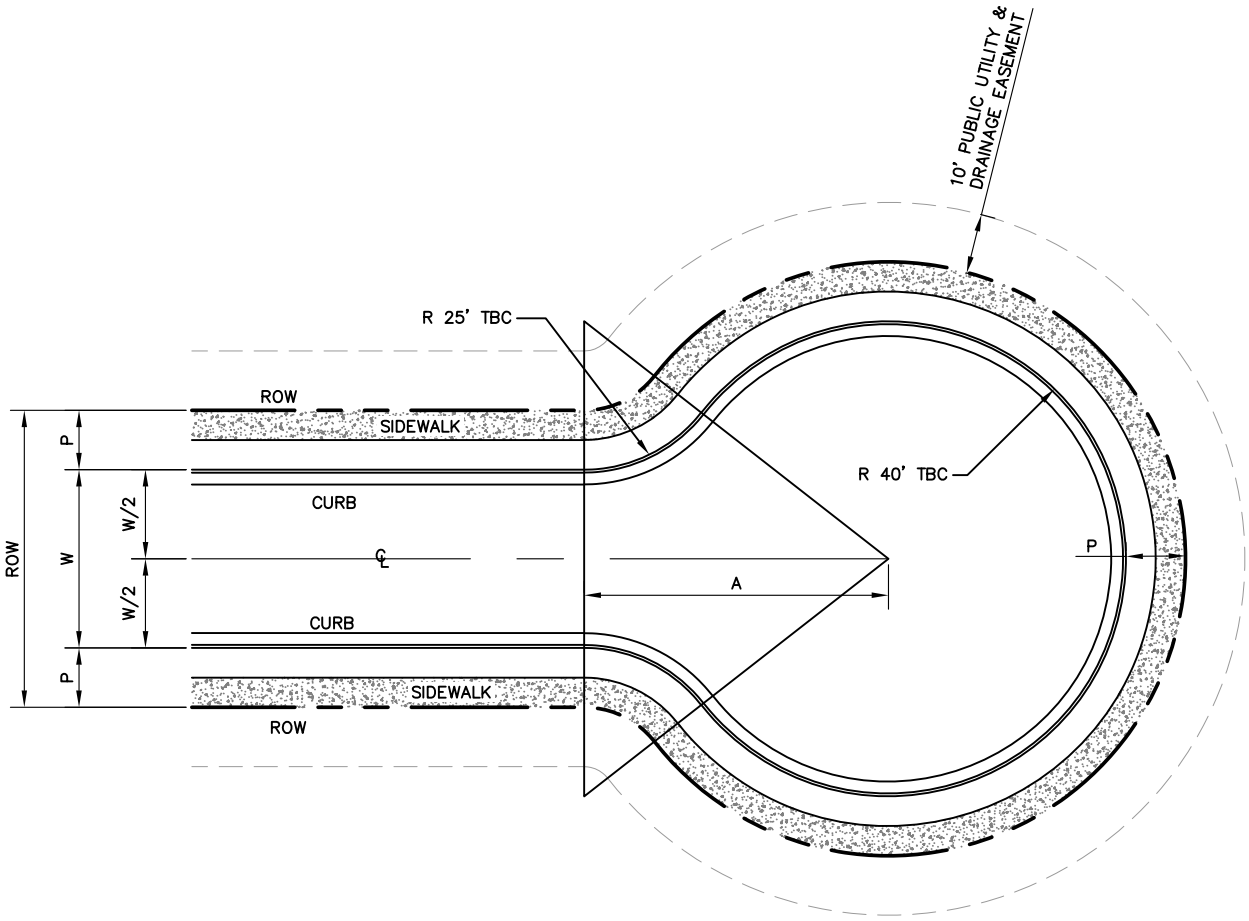

W FT.	W/2 FT.	ROW	P FT.	A FT.
30	15	50	10	51.23'

CUL–DE–SAC NOTES

1. MAXIMUM LENGTH: THE MAXIMUM LENGTH OF A CUL–DE–SAC MAY BE 450 FEET MEASURED FROM THE INTERSECTION OF THE NEAREST THROUGH STREET TO THE CENTER OF THE CUL–DE–SAC.
2. RADIUS: THE MINIMUM CUL–DE–SAC RADIUS ALLOWED IS 50 FEET MEASURED FROM THE CENTER OF THE CUL–DE–SAC TO THE NEAREST EDGE OF THE DEDICATED RIGHT OF WAY LINE.
3. ROADWAY CONSTRUCTION: ROAD CROSS SECTION SHALL FOLLOW REQUIREMENTS SET FORTH IN STANDARD DRAWING RD–040.
4. TEMPORARY CUL–DE–SAC: A TEMPORARY CUL–DE–SAC MUST MEET THE REQUIREMENTS OF THIS STANDARD DRAWING WITH THE EXCEPTION OF CURB/GUTTER AND SIDEWALK CONSTRUCTION WITHIN THE CUL–DE–SAC. TEMPORARY IMPROVEMENTS SHALL INCLUDE SIGNAGE THAT INDICATES THE ROADWAY ENDS. TEMPORARY IMPROVEMENTS MUST BE REMOVED PRIOR TO THE ROADWAY BEING EXTENDED.

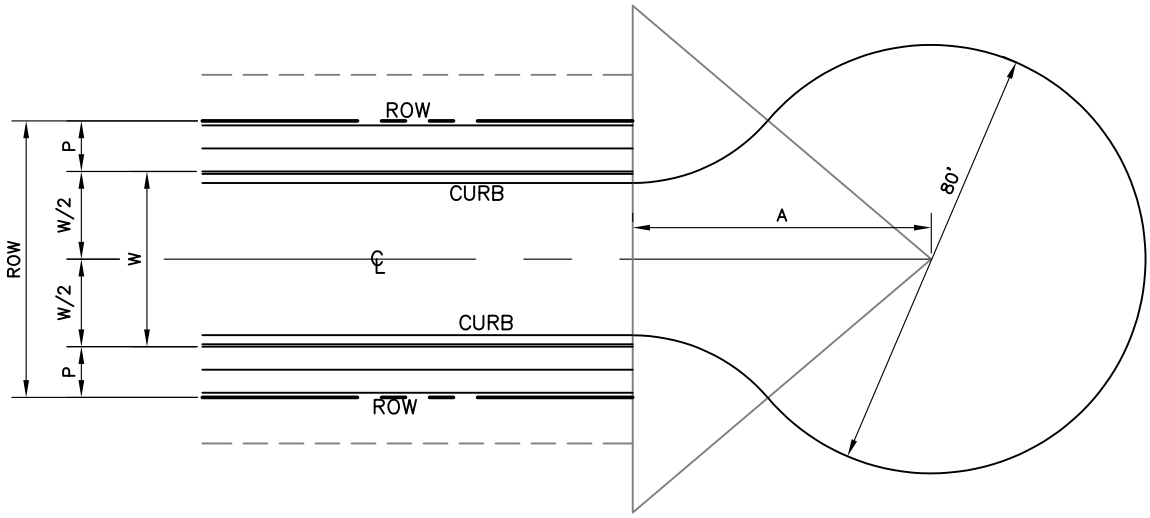

W FT.	W/2 FT.	P FT.	A FT.
30'	15' MIN	VARIES	64.81

1. MINIMUM 3" ASPHALT PAVING
   OVER 6" COMPACTED ROADBASE.

DRAWING UPDATED MAY 2014

City of West Jordan, Utah

WEST JORDAN UTAH

TEMPORARY EMERGENCY VEHICLE TURN AROUND

PLAN

RD 71

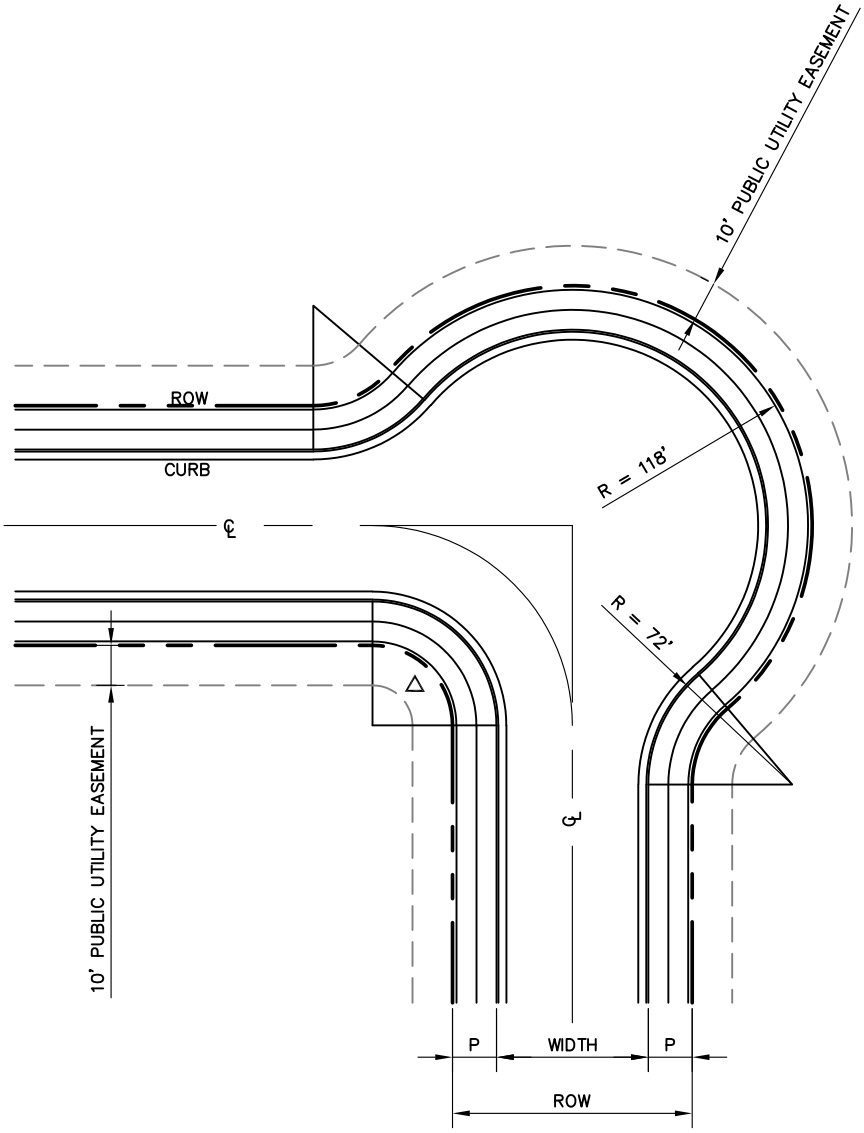

NOTES

WHEN △ IS LESS THAN 72° A SMOOTH CURVE WITH A MINIMUM RADIUS CONFORMING WITH THE STANDARDS FOR THE PARTICULAR GEOMETRIC SECTION SHALL BE USED.

DRAWING UPDATED MAY 2014

City of West Jordan, Utah

WEST JORDAN UTAH

ROAD INTERSECTION "L" SHAPE

PLAN

RD 75

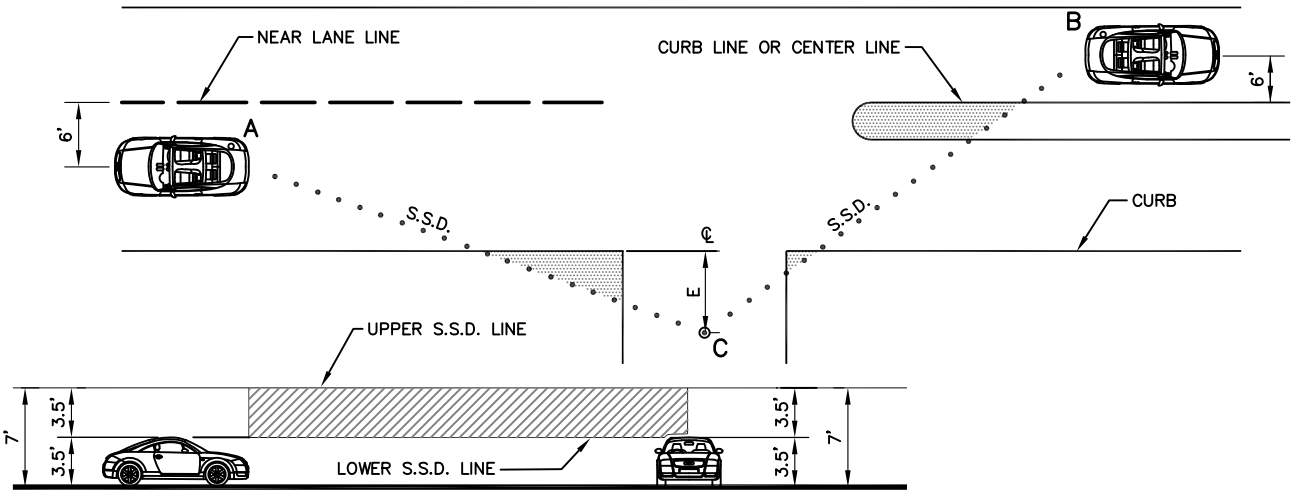

DESIGN SPEED	MIN. S.S.D. FOR LEFT TURNS AT STOP
20	225'
25	280'
30	335'
35	390'
40	445'
45	500'
50	555'
55	610'
60	665'

E = 8' AT DRIVEWAYS AND 15' AT PUBLIC ROAD INTERSECTIONS. (LESSER VALUES TO 0' WILL ONLY BE CONSIDERED UNDER SPECIAL SITUATIONS).

HEIGHT OF EYE/OBJECT AT POINTS A AND B AND C = 3.5' LOWER LIMIT AND 7' UPPER LIMIT.

S.S.D.= MINIMUM STOPPING SIGHT DISTANCE

LIMITS OF VERTICAL SIGHT ZONE

LIMITS OF HORIZONTAL SIGHT ZONE

DESIGN ENGINEER SHALL ABIDE BY ALL GUIDELINES STATED IN THE AASHTO POLICY ON GEOMETRIC DESIGN OF HIGHWAY AND STREETS.

THERE SHALL BE NO SIGHT DISTANCE OBSTRUCTION IN EITHER THE HORIZONTAL OR VERTICAL SIGHT ZONES. SIGHT DISTANCE OBSTRUCTION ARE OBJECTS THAT MAY BLOCK THE VIEW OF MOTORISTS INCLUDING UTILITY VENTS, HILLS, WALLS, SIGNS, STREET FURNITURE, MATURE LANDSCAPING*, HORIZONTAL AND VERTICAL ROAD CURVATURES ETC., IN THE COMBINED HORIZONTAL AND VERTICAL SIGHT ZONES. INDIVIDUAL ELEMENTS (OTHER THAN DECIDUOUS STREET TREES) SHALL BE NO THICKER THAN 12 INCHES NOR SPACED CLOSER THAN 100 FEET APART AT INTERSECTIONS OR 50 FEET APART AT DRIVEWAYS.

CITY POLICY FOR EVALUATING SIGHT DISTANCE ON ALL PROPOSED PROJECTS:

1. THE DEVELOPERS ENGINEER SHALL EVALUATE ALL PROPOSED INTERSECTIONS AND DRIVEWAYS AGAINST THE MINIMUM S.S.D. CRITERIA FOR GRADING PLANS, TRACT MAPS, AND LANDSCAPE PLANS.
2. IF ANY LOCATIONS ARE IDENTIFIED WITH AN S.S.D. LESS THAN THE MINIMUM S.S.D. FOR ANY OF THE ORDERS OF PREFERENCE, THE DEVELOPER'S ENGINEER SHALL BRING THESE LOCATIONS TO THE ATTENTION OF THE CITY'S PROJECT ENGINEER BY IDENTIFYING THE EXACT LENGTH OF S.S.D. THAT IS AVAILABLE AS TO EACH ORDER OF PREFERENCE AND THE SPEED ASSOCIATED WITH SAME AND THE OBSTRUCTION LIMITING THE S.S.D. SHALL BE IDENTIFIED. THE DEVELOPER'S ENGINEER SHALL ALSO NOTE ON THE PLANS WHAT IMPROVEMENTS WOULD BE NECESSARY TO OBTAIN THE 'MINIMUM' S.S.D.

*NOTE:
IT IS ESPECIALLY CRITICAL THAT 'MATURE LANDSCAPING' BE CONSIDERED IN THIS S.S.D. CRITERIA NOT JUST THE BARREN GROUND.

DRAWING UPDATED JUNE, 2019

City of West Jordan, Utah

WEST JORDAN UTAH

STOPPING SIGHT DISTANCE REQUIRED AT INTERSECTIONS AND DRIVEWAYS

PLAN

RD 85

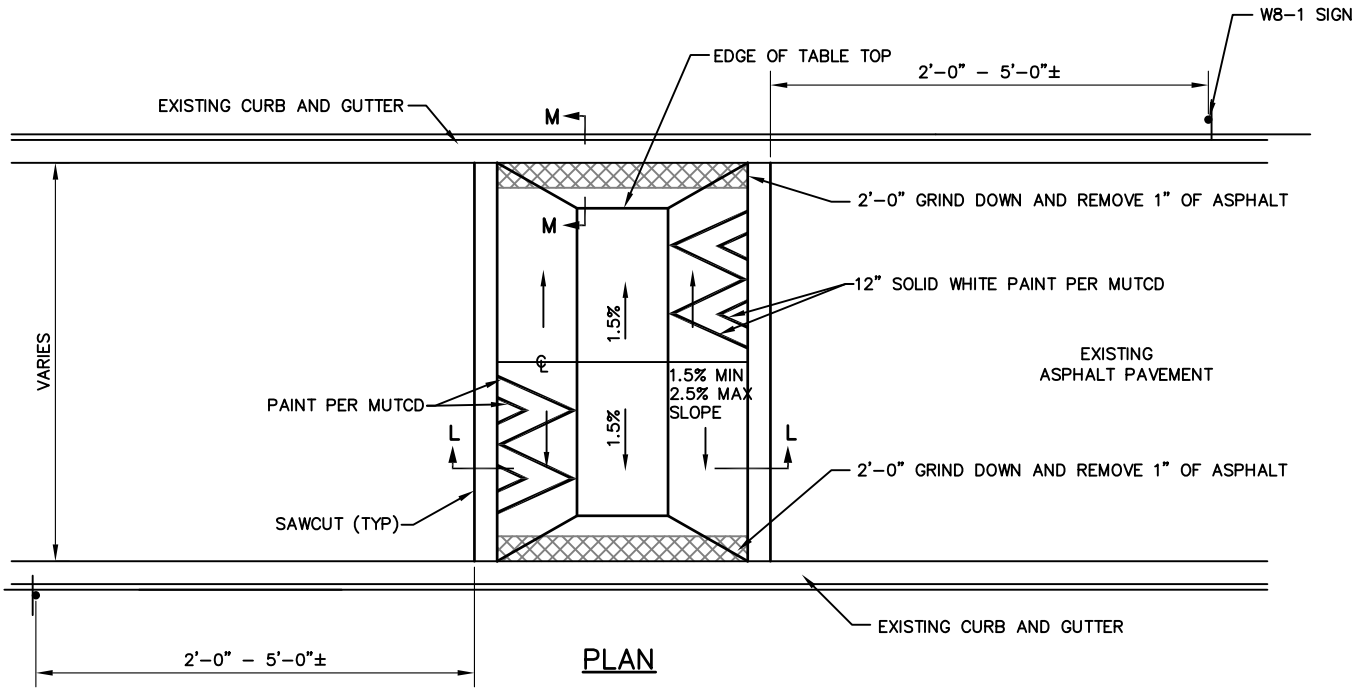

PLAN

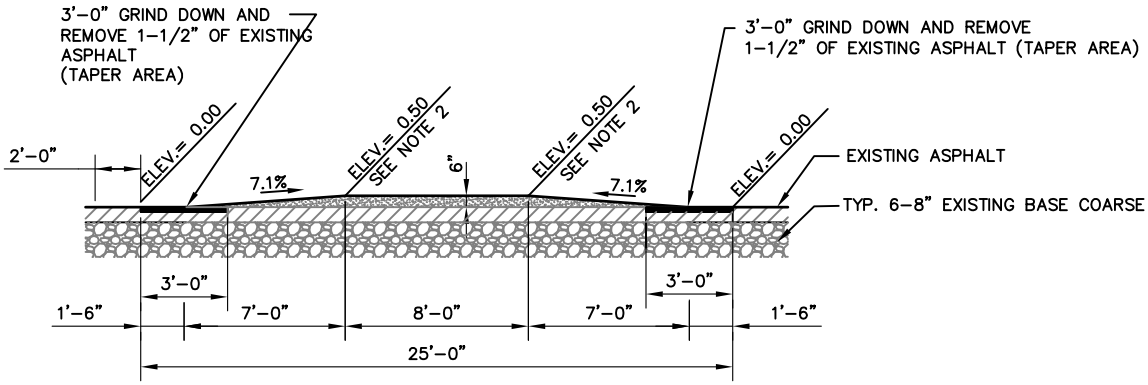

NOTE: COMPACT 6" TO 8" UNTREATED BASE TO 4" THICKNESS

SECTION L-L

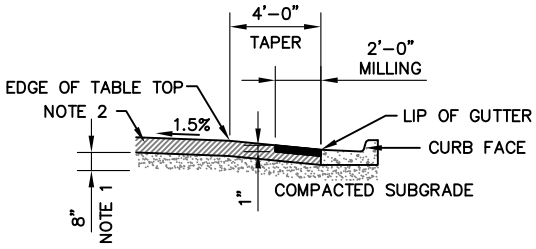

SECTION M-M

STANDARD ASPHALT

ASPHALT SPEED TABLE

1. UNTREATED BASE COURSE; PROVIDE CLASS A UNTREATED BASE COURSE SPECIFIED IN APWA SECTION 32 11 23.
   A. DO NOT USE GRAVEL AS A SUBSTITUTE FOR UNTREATED BASE COURSE WITHOUT ENGINEER'S PERMISSION.
   B. PLACE MATERIAL PER APWA SECTION 32 05 10.
   C. COMPACT PER APWA SECTION 31 23 26 TO A MODIFIED PROCTOR DENSITY OF 95 PERCENT OR GREATER. MAXIMUM LIFT THICKNESS BEFORE COMPACTION IS 8 INCHES WHEN USING RIDING COMPACTION EQUIPMENT OR 6 INCHES WHEN USING HAND HELD COMPACTION EQUIPMENT.

2. ASPHALT PAVEMENT: USE PG-64-34 DM-1/2 ASPHALT CONCRETE PAVEMENT SPECIFIED IN APWA SECTION 32 12 05.
   A. INSTALL IN LIFTS NO GREATER THAT 3 INCHES AFTER COMPACTION.
   B. COMPACT EACH LIFT TO 94 PERCENT OF ASTM D 2041 (RICE METHOD) PLUS OR MINUS 2 PERCENT.

3. TACK COAT: APWA SECTION 32 12 13.13 CLEAN ALL VERTICAL SURFACES ADJACENT TO THE PATCH. APPLY FULL COVERAGE TACK COAT.

4. ASPHALT PAVEMENT JOINTS: PROVIDE A NEAT STRAIGHT JOINT BETWEEN EXISTING AND NEW ASPHALT CONCRETE. SAW-CUT JOINT IF EXISTING PAVEMENT EXCEEDS 2 INCHES IN THICKNESS PAVEMENT.

5. JOINT REPAIR: IF A CRACK OCCURS AT THE CONNECTION TO EXISTING PAVEMENT OR AT ANY STREET FIXTURE, SEAL THE CRACK PER APWA SECTION 32 01 17.

6. MILLING: APWA SECTION 02 41 14
   A. REMOVE COMPACTED MILLING ON PREPARED SURFACES
   B. MILL AROUND GUTTER LIP RADII TO SPECIFIED DEPTH PRIOR TO PAVING.

7. PAINT: PROVIDE ALKYD RESIN PAINT AS SPECIFIED IN UDOT SECTION 02765 AND SECTION 02768. REMOVE DIRT, LOOSE STONES, OR OTHER FOREIGN MATERIAL IMMEDIATELY PRIOR TO APPLYING. APPLY PER UDOT SECTION 02765 AND 02768.

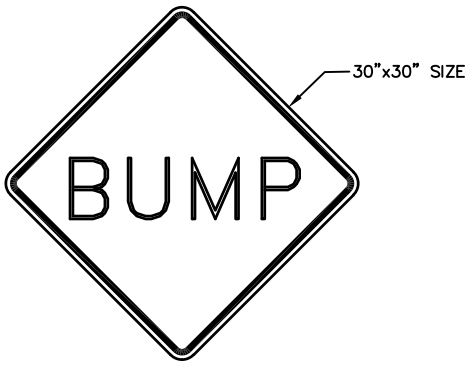

W8-1

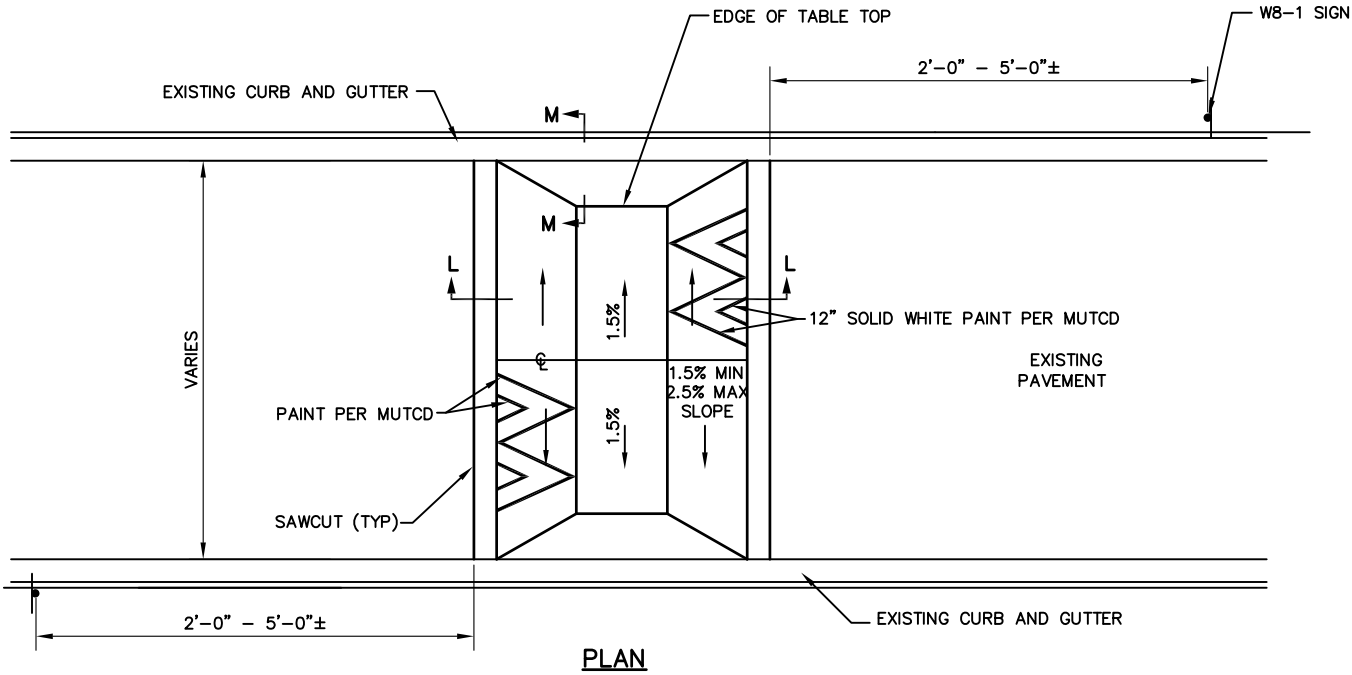

PLAN

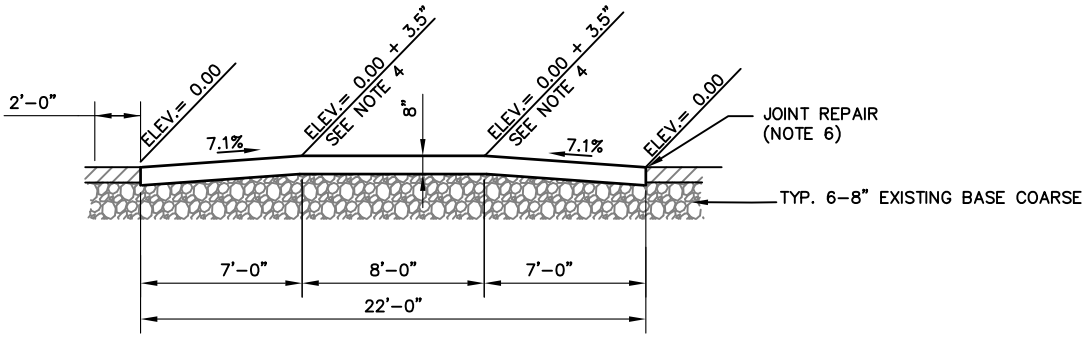

NOTE: COMPACT 6" TO 8" UNTREATED BASE TO 4" THICKNESS

SECTION L-L

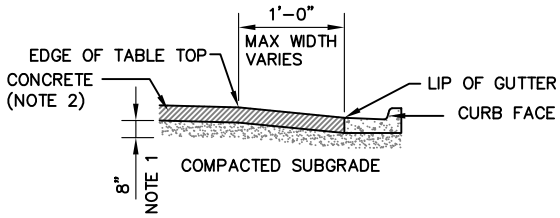

SECTION M-M

STANDARD CONCRETE

CONCRETE SPEED TABLE

1. UNTREATED BASE COURSE; PROVIDE CLASS A UNTREATED BASE COURSE SPECIFIED IN APWA SECTION 32 11 23.
   A. DO NOT USE GRAVEL AS A SUBSTITUTE FOR UNTREATED BASE COURSE WITHOUT ENGINEER'S PERMISSION.
   B. PLACE MATERIAL PER APWA SECTION 32 11 23.
   C. COMPACT PER APWA SECTION 31 23 26 TO A MODIFIED PROCTOR DENSITY OF 95 PERCENT OR GREATER. MAXIMUM LIFT THICKNESS BEFORE COMPACTION IS 8 INCHES WHEN USING RIDING COMPACTION EQUIPMENT OR 6 INCHES WHEN USING HAND HELD COMPACTION EQUIPMENT.

2. CONCRETE: CLASS 4000 PER APWA SECTION 03 30 04.
   A. IF NECESSARY, PROVIDE CONCRETE THAT ACHIEVES DESIGN STRENGTH IN LESS THAN 7 DAYS. USE CAUTION; HOWEVER, AS CONCRETE CRAZING (SPIDER CRACKS) MAY DEVELOP IF AIR TEMPERATURE EXCEEDS 90 DEGREES F.
   B. PLACE CONCRETE PER APWA SECTION 03 30 10
   C. PROVIDE 1/2 INCH RADIUS ON CONCRETE EDGES EXPOSED TO PUBLIC VIEW.
   D. CURE CONCRETE PER APWA SECTION 03 39 00 WITH TYPE ID CLASS A OR B (CLEAR WITH FUGITIVE DYE) MEMBRANE FORMING COMPOUND UNLESS SPECIFIED OTHERWISE.

3. EXPANSION JOINTS:
   A. MAKE EXPANSION JOINTS VERTICAL, FULL DEPTH.
   B. PROVIDE F1 JOINT FILLER MATERIAL 1/2 INCH WIDE, APWA SECTION 32 13 73.
   C. SET TOP OF FILLER FLUSH WITH SURFACE OF CONCRETE.

4. CONTRACTION JOINT: MAKE CONTRACTION JOINTS VERTICAL 1/8 INCH WIDE AND 1/3 SLAB THICKNESS.

5. FINISH: BROOMED.

6. JOINT REPAIR: IF A CRACK OCCURS AT THE CONNECTION TO EXISTING PAVEMENT, SEAL THE CRACK PER APWA SECTION 32 01 17.

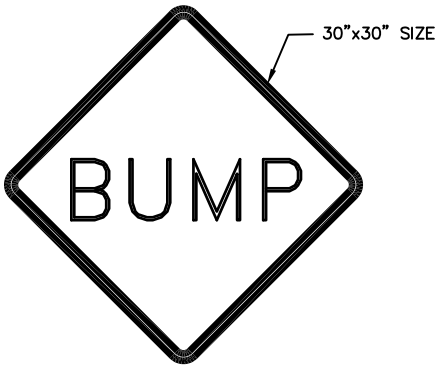

W8–1

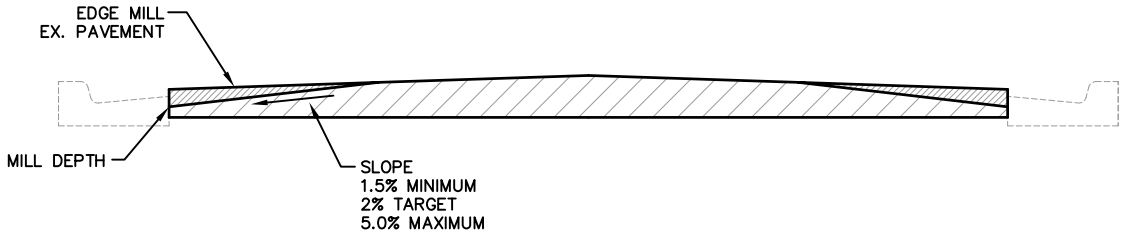

MILL DETAIL TYPICAL SECTION

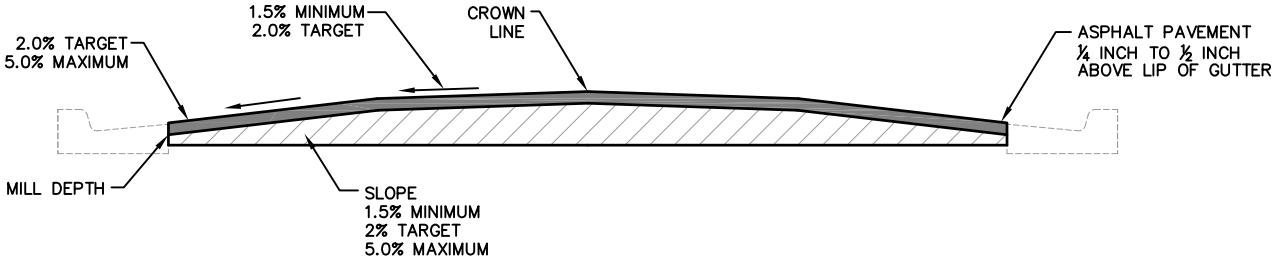

OVERLAY DETAIL TYPICAL SECTION

ASPHALT CONCRETE PAVEMENT OVERLAY NOTES

1. MILLING: APWA Section 02 41 14.
   A. REMOVE COMPACTED MILLINGS ON PREPARED SURFACES.
   B. MILL AROUND GUTTER LIP RADII TO SPECIFIED DEPTH PRIOR TO PAVING.
   C. LOWER VALVES, MANHOLES, MONUMENTS PRIOR TO MILLING.
   D. CONTRACTOR SHALL SWEEP STREETS AFTER MILLING PROCESS.
2. TACK COAT: PROVIDE FULL TACK COAT ON ALL HORIZONTAL AND VERTICAL SURFACES PER APWA SECTION 32 12 13.13.
3. NEW ASPHALT PAVEMENT: USE PG64-34 DM-1/2 HOT MIX ASPHALT PER APWA SECTION 32 12 16.13. ASPHALT PAVEMENT MUST BE PLACED WITHIN 48 HOURS AFTER MILLING.
4. LEVEL COURSE: CONTRACTOR SHALL FURNISH AND INSTALL ASPHALT LEVEL COURSE IN AREAS IDENTIFIED BY THE INSPECTOR AS REFERENCED IN THE BID DOCUMENTS.
5. PAVEMENT JOINTS: CONTRACTOR SHALL PLACE LONGITUDINAL JOINT WITHIN 1 FOOT OF CENTER LANE OR LANE STRIPE.
6. PAVEMENT MARKINGS: CONTRACTOR SHALL FURNISH AND INSTALL NEW PAVEMENT MARKINGS AS SPECIFIED IN THE BID DOCUMENTS. ALL MARKINGS SHALL BE APPLIED IN ACCORDANCE WITH UDOT SPECIFICATION 02765 AND 02768.
7. TRAFFIC CONTROL: CONTRACTOR IS REQUIRED TO PROVIDE ADEQUATE WORK ZONE TRAFFIC CONTROL AS SPECIFIED IN THE MOST CURRENT EDITION OF THE MANUAL ON UNIFORM TRAFFIC CONTROL DEVICES OR MUTCD.

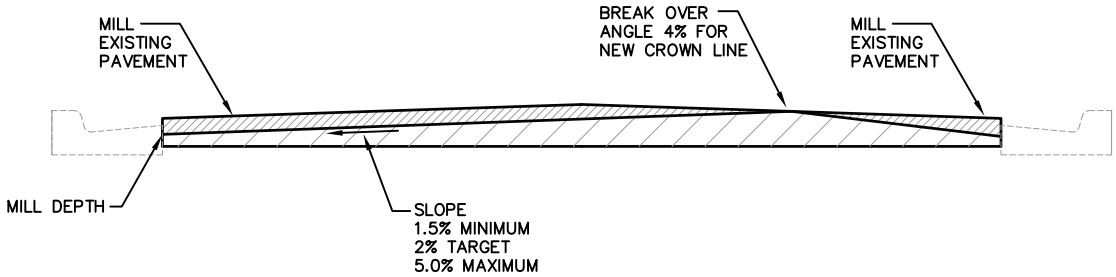

FULL MILL DETAIL TYPICAL SECTION

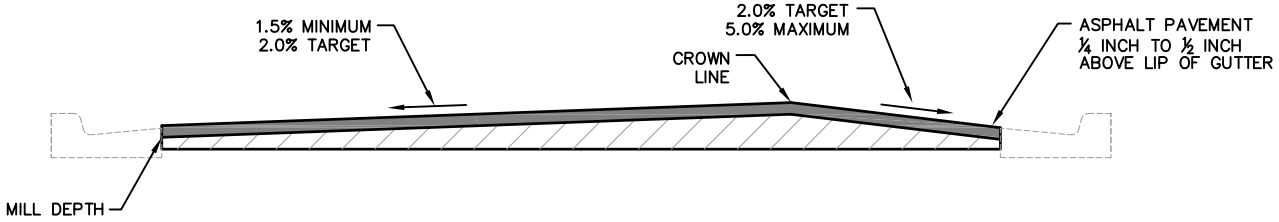

OVERLAY DETAIL TYPICAL SECTION

ASPHALT CONCRETE PAVEMENT FULL MILL AND OVERLAY NOTES

1. MILLING: APWA SECTION 02 41 14.
   A. IDENTIFY LOCATION OF NEW CROWN LINE WITH ENGINEER.
   B. USE AN AUTOMATIC GRADE SENSOR TO CONTROL THE HORIZONTAL POSITION AND PROFILE GRADE AT THE NEW CROWN LINE.
   C. START MILLING IN A LONGITUDINAL DIRECTION WITH THE FIRST PASS ADJACENT TO THE NEW CROWN LINE. DO SUCCEEDING PASSES PARALLEL AND ADJACENT TO THE PREVIOUS PASS.
   D. REMOVE COMPACTED MILLINGS ON PREPARED SURFACES.
   E. MILL AROUND GUTTER LIP RADII TO SPECIFIED DEPTH PRIOR TO PAVING.
   F. LOWER VALVES, MANHOLES, MONUMENTS PRIOR TO MILLING.
   G. CONTRACTOR SHALL SWEEP STREETS AFTER MILLING PROCESS.

2. TACK COAT: PROVIDE FULL TACK COAT ON ALL HORIZONTAL AND VERTICAL SURFACES PER APWA SECTION 32 12 13.13.

3. NEW ASPHALT PAVEMENT: ASPHALT PAVEMENT MUST BE PLACED WITHIN 48 HOURS AFTER MILLING. USE PG64-34 DM-1/2 HOT MIX ASPHALT PER APWA SECTION 32 12 16.13. . PLACE IN LIFTS NO GREATER THAN 3 INCHES AFTER COMPACTION. COMPACT TO 94 PERCENT OF ASTM D2041 (RICE DENSITY) PLUS OR MINUS 2 PERCENT.

4. LEVEL COURSE: CONTRACTOR SHALL FURNISH AND INSTALL ASPHALT LEVEL COURSE IN AREAS IDENTIFIED BY THE INSPECTOR AS REFERENCED IN THE BID DOCUMENTS.

5. PAVEMENT JOINTS: CONTRACTOR SHALL PLACE LONGITUDINAL JOINT WITHIN 1 FOOT OF CENTER LANE OR LANE STRIPE.

6. PAVEMENT MARKINGS: CONTRACTOR SHALL FURNISH AND INSTALL NEW PAVEMENT MARKINGS AS SPECIFIED IN THE BID DOCUMENTS. ALL MARKINGS SHALL BE APPLIED IN ACCORDANCE WITH UDOT SPECIFICATION 02765 AND 02768.

7. TRAFFIC CONTROL: CONTRACTOR IS REQUIRED TO PROVIDE ADEQUATE WORK ZONE TRAFFIC CONTROL AS SPECIFIED IN THE MOST CURRENT EDITION OF THE MANUAL ON UNIFORM TRAFFIC CONTROL DEVICES OR MUTCD.

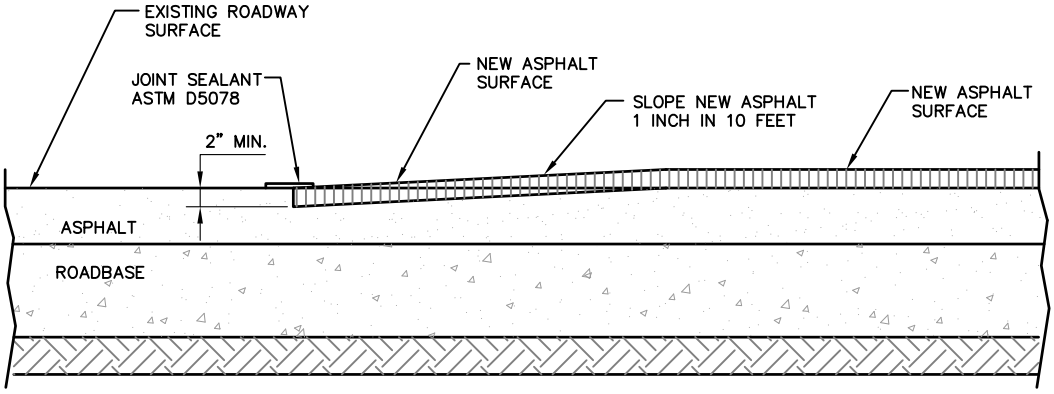

TAPER APPROACH DETAIL

NTS

ASPHALT CONCRETE PAVEMENT FULL MILL AND OVERLAY NOTES

1. MILLING: APWA SECTION 02 41 14.
   A. REMOVE COMPACTED MILLINGS ON PREPARED SURFACES.
   B. MILL AROUND GUTTER LIP RADII TO SPECIFIED DEPTH PRIOR TO PAVING.
   C. LOWER VALVES, MANHOLES, MONUMENTS PRIOR TO MILLING.
   D. CONTRACTOR SHALL SWEEP STREETS AFTER MILLING PROCESS.

2. TACK COAT: PROVIDE FULL TACK COAT ON ALL HORIZONTAL AND VERTICAL SURFACES PER APWA SECTION 32 12 13.13.

3. NEW ASPHALT PAVEMENT: ASPHALT PAVEMENT MUST BE PLACED WITHIN 48 HOURS AFTER MILLING. USE PG64–34 DM–1/2 HOT MIX ASPHALT PER APWA SECTION 32 12 16.13. . PLACE IN LIFTS NO GREATER THAN 3 INCHES AFTER COMPACTION. COMPACT TO 94 PERCENT OF ASTM D2041 (RICE DENSITY) PLUS OR MINUS 2 PERCENT.

4. PAVEMENT JOINTS: CONTRACTOR SHALL PLACE LONGITUDINAL JOINT WITHIN 1 FOOT OF CENTER LANE OR LANE STRIPE. IF A CRACK APPEARS AT THE JOINT OF THE NEW PAVEMENT END THE EXISTING PAVEMENT FILL WITH JOINT SEALANT PER APWA SECTION 32 01 17..

5. TRAFFIC CONTROL: CONTRACTOR IS REQUIRED TO PROVIDE ADEQUATE WORK ZONE TRAFFIC CONTROL AS SPECIFIED IN THE MOST CURRENT EDITION OF THE MANUAL ON UNIFORM TRAFFIC CONTROL DEVICES OR MUTCD.

NOTES:

1. UNTREATED BASE COURSE: USE CLASS A UNTREATED BASE COARSE GRADE 1 OR GRADE 3/4 PER APWA SECTION 32 11 23. USE OF SEWER ROCK OR RECYCLED AGGREGATE REQUIRES ENGINEER'S WRITTEN APPROVAL.

   A. PLACE BACKFILL MATERIAL PER APWA SECTION 32 05 10.
   B. COMPACT BACKFILL MATERIAL PER APWA SECTION 31 23 26 TO A MODIFIED PROCTOR DENSITY OF 95 PERCENT OR GREATER.

2. CONCRETE: CLASS 4000 PER APWA SECTION 03 30 04.

   A. IF NECESSARY, PROVIDE CONCRETE WHICH ACHIEVES DESIGN STRENGTH IN 72 HOURS (3 DAYS). USE CAUTION, HOWEVER, AS SPIDER CRACKS DEVELOP IF AIR TEMPERATURE EXCEEDS 90 DEGREES F.
   B. PLACE CONCRETE PER APWA SECTION 03 30 10 .
   C. PROVIDE 1/2 INCH RADIUS ON ALL EXPOSED CONCRETE EDGES UNLESS OTHERWISE SHOWN.
   D. APPLY A SEALING/CURING COMPOUND PER APWA SECTION 03 39 00. (TYPE ID CLASS A; CLEAR WITH FUGITIVE DYE)
   E. PROTECT CONCRETE FROM PREMATURE DRYING, HOT OR COLD TEMPERATURES, GRAFFITI, AND MECHANICAL INJURY.
   F. REPLACE CONCRETE DAMAGED BY MECHANICAL INJURY OR THAT DOES NOT CONFORM TO REQUIRED LEVELS, LINES, DETAILS AND ELEVATIONS.

3. EXPANSION JOINTS:

   A. PROVIDE FULL DEPTH 1/2 INCH THICK F1 JOINT FILLER MATERIAL PER APWA SECTION 32 13 73. SET TOP OF FILLER FLUSH WITH SURFACE OF CONCRETE. PLACE EXPANSION JOINTS EVERY 50 FEET.
   B. EXPANSION JOINTS ARE NOT REQUIRED IN SLIP FORM WORK EXCEPT AT THE START OR END OF THE WORK DAY, AND AT THE START OR END OF A STREET INTERSECTION CURB RADIUS RETURN.

4. CONTRACTION JOINTS: MAKE CONTRACTION JOINTS VERTICAL, AT LEAST 1/8" WIDE, AND 2 INCHES DEEP OR 1/4 SLAB THICKNESS IF THE SLAB IS GREATER THAN 8 INCHES THICK. PLACE CONTRACTION JOINTS EVERY 10 FEET.

5. SLOPE: CURB AND GUTTER SHALL BE CONSTRUCTED WITH A SLOPE GREATER THAN 0.50%.

6. ADD SEWER STUB TACKS INTO CURB WHERE LATERAL CROSSES UNDER CURB

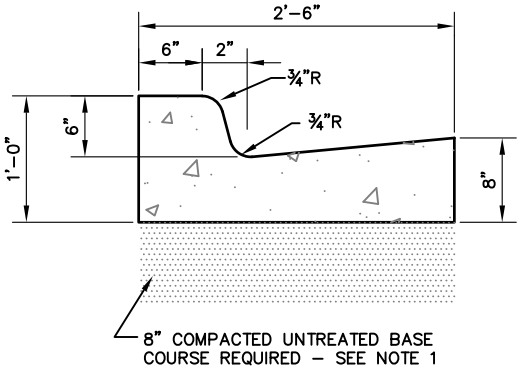

TYPE A CURB & GUTTER
ALL NEW CONSTRUCTION

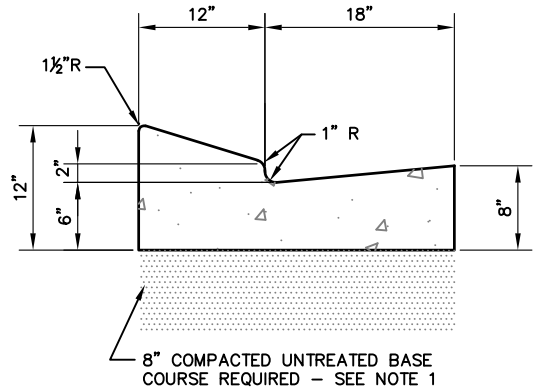

TYPE B CURB & GUTTER
REPLACEMENT ONLY

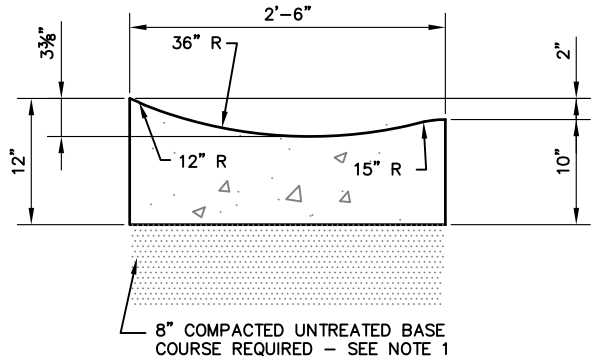

TYPE C CURB & GUTTER
REPLACEMENT ONLY

NOTES:

1. UNTREATED BASE COURSE: USE CLASS A UNTREATED BASE COARSE GRADE 1 OR GRADE 3/4 PER APWA SECTION 32 11 23. USE OF SEWER ROCK OR RECYCLED AGGREGATE REQUIRES ENGINEER'S WRITTEN APPROVAL.

   A. PLACE BACKFILL MATERIAL PER APWA SECTION 32 05 10.
   B. COMPACT BACKFILL MATERIAL PER APWA SECTION 31 23 26 TO A MODIFIED PROCTOR DENSITY OF 95 PERCENT OR GREATER.

2. CONCRETE: CLASS 4000 PER APWA SECTION 03 30 04.

   A. IF NECESSARY, PROVIDE CONCRETE WHICH ACHIEVES DESIGN STRENGTH IN 72 HOURS (3 DAYS). USE CAUTION, HOWEVER, AS SPIDER CRACKS DEVELOP IF AIR TEMPERATURE EXCEEDS 90 DEGREES F.
   B. PLACE CONCRETE PER APWA SECTION 03 30 10.
   C. PROVIDE 1/2 INCH RADIUS ON ALL EXPOSED CONCRETE EDGES UNLESS OTHERWISE SHOWN.
   D. APPLY A SEALING/CURING COMPOUND PER APWA SECTION 03 39 00. (TYPE ID CLASS A; CLEAN WITH FUGITIVE DYE)
   E. PROTECT CONCRETE FROM PREMATURE DRYING, HOT OR COLD TEMPERATURES, GRAFFITI, AND MECHANICAL INJURY.
   F. REPLACE CONCRETE DAMAGED BY MECHANICAL INJURY, OR THAT DOES NOT CONFORM TO REQUIRED LEVELS, LINES, DETAILS AND ELEVATIONS.

3. EXPANSION JOINTS:

   A. PROVIDE FULL DEPTH 1/2 INCH THICK F1 JOINT FILLER MATERIAL PER APWA SECTION 32 13 73. SET TOP OF FILLER FLUSH WITH SURFACE OF CONCRETE. PLACE EXPANSION JOINTS EVERY 50 FEET.
   B. EXPANSION JOINTS ARE NOT REQUIRED IN SLIP FORM WORK EXCEPT AT THE START OR END OF THE WORK DAY, AND AT THE START OR END OF A STREET INTERSECTION CURB RADIUS RETURN.

4. CONTRACTION JOINTS: MAKE CONTRACTION JOINTS VERTICAL, AT LEAST 1/8" WIDE, AND 2 INCHES DEEP OR 1/4 SLAB THICKNESS IF THE SLAB IS GREATER THAN 8 INCHES THICK. PLACE CONTRACTION JOINTS EVERY 10 FEET.

5. REBAR: CONTRACTOR TO USE 3/4 INCH COATED DEFORMED DOWELS ON 5 FEET MAXIMUM CENTERS.

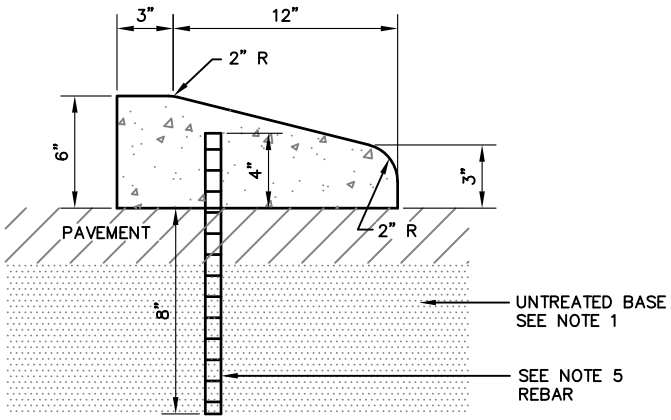

TYPE D CURB

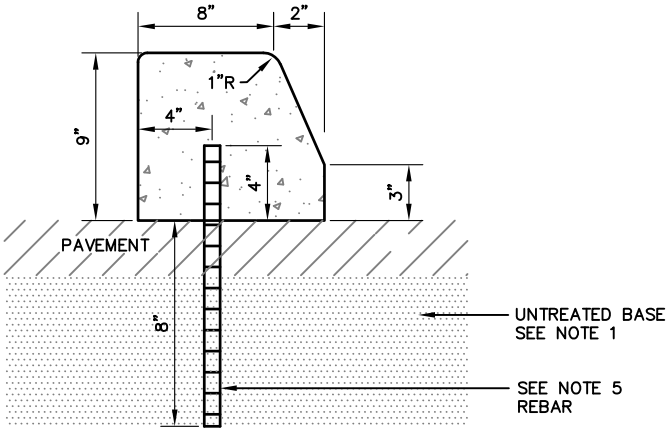

TYPE E CURB

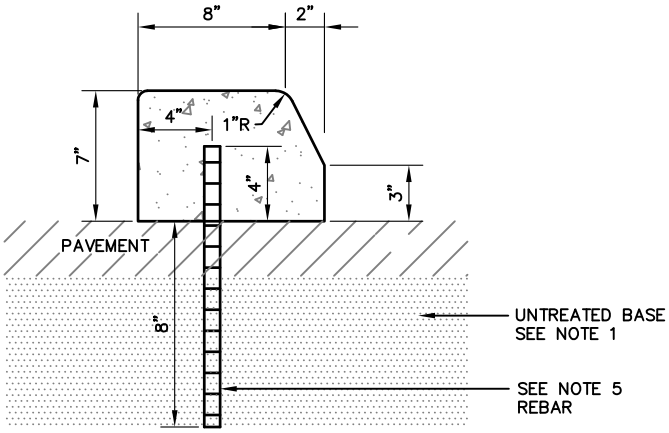

TYPE F CURB

DRAWING UPDATED JUNE, 2019

City of West Jordan, Utah

WEST JORDAN UTAH

STANDARD MEDIAN CURB

PLAN

RD105

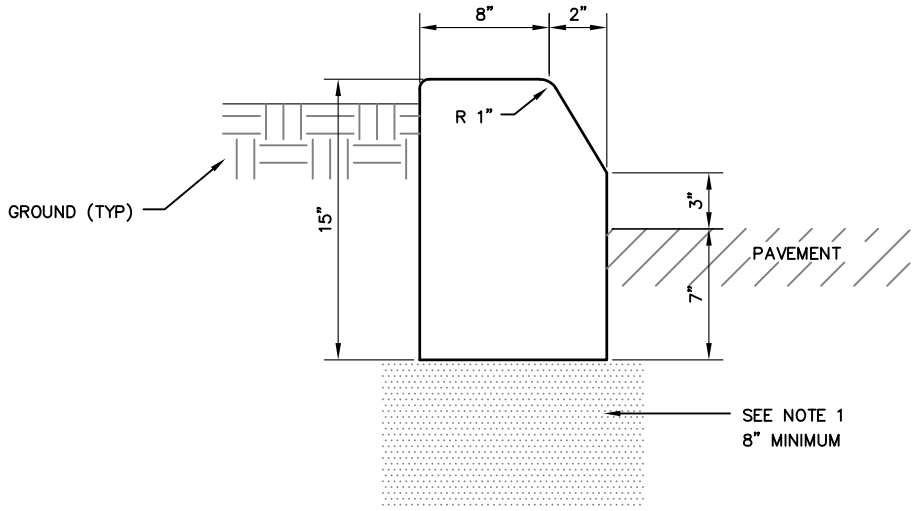

TYPE G CURB

NOTES:

1. UNTREATED BASE COURSE: USE CLASS A UNTREATED BASE COARSE GRADE 1 OR GRADE 3/4 PER APWA SECTION 32 11 23. USE OF SEWER ROCK OR RECYCLED AGGREGATE REQUIRES ENGINEER'S WRITTEN APPROVAL.

   A. PLACE BACKFILL MATERIAL PER APWA SECTION 32 05 10.
   B. COMPACT BACKFILL MATERIAL PER APWA SECTION 31 23 26 TO A MODIFIED PROCTOR DENSITY OF 95 PERCENT OR GREATER.

2. CONCRETE: CLASS 4000 PER APWA SECTION 03 30 04.

   A. IF NECESSARY, PROVIDE CONCRETE WHICH ACHIEVES DESIGN STRENGTH IN 72 HOURS (3 DAYS). USE CAUTION, HOWEVER, AS SPIDER CRACKS DEVELOP IF AIR TEMPERATURE EXCEEDS 90 DEGREES F.
   B. PLACE CONCRETE PER APWA SECTION 03 30 10.
   C. PROVIDE 1/2 INCH RADIUS ON ALL EXPOSED CONCRETE EDGES UNLESS OTHERWISE SHOWN.
   D. APPLY A SEALING/CURING COMPOUND PER APWA SECTION 03 39 00. (TYPE ID CLASS A; CLEAN WITH FUGITIVE DYE)
   E. PROTECT CONCRETE FROM PREMATURE DRYING, HOT OR COLD TEMPERATURES, GRAFFITI, AND MECHANICAL INJURY.
   F. REPLACE CONCRETE DAMAGED BY MECHANICAL INJURY, OR THAT DOES NOT CONFORM TO REQUIRED LEVELS, LINES, DETAILS AND ELEVATIONS.

3. EXPANSION JOINTS:

   A. PROVIDE FULL DEPTH 1/2 INCH THICK F1 JOINT FILLER MATERIAL PER APWA SECTION 32 13 73. SET TOP OF FILLER FLUSH WITH SURFACE OF CONCRETE. PLACE EXPANSION JOINTS EVERY 50 FEET.
   B. EXPANSION JOINTS ARE NOT REQUIRED IN SLIP FORM WORK EXCEPT AT THE START OR END OF THE WORK DAY, AND AT THE START OR END OF A STREET INTERSECTION CURB RADIUS RETURN.

4. CONTRACTION JOINTS: MAKE CONTRACTION JOINTS VERTICAL, AT LEAST 1/8" WIDE, AND 2 INCHES DEEP OR 1/4 SLAB THICKNESS IF THE SLAB IS GREATER THAN 8 INCHES THICK. PLACE CONTRACTION JOINTS EVERY 10 FEET.

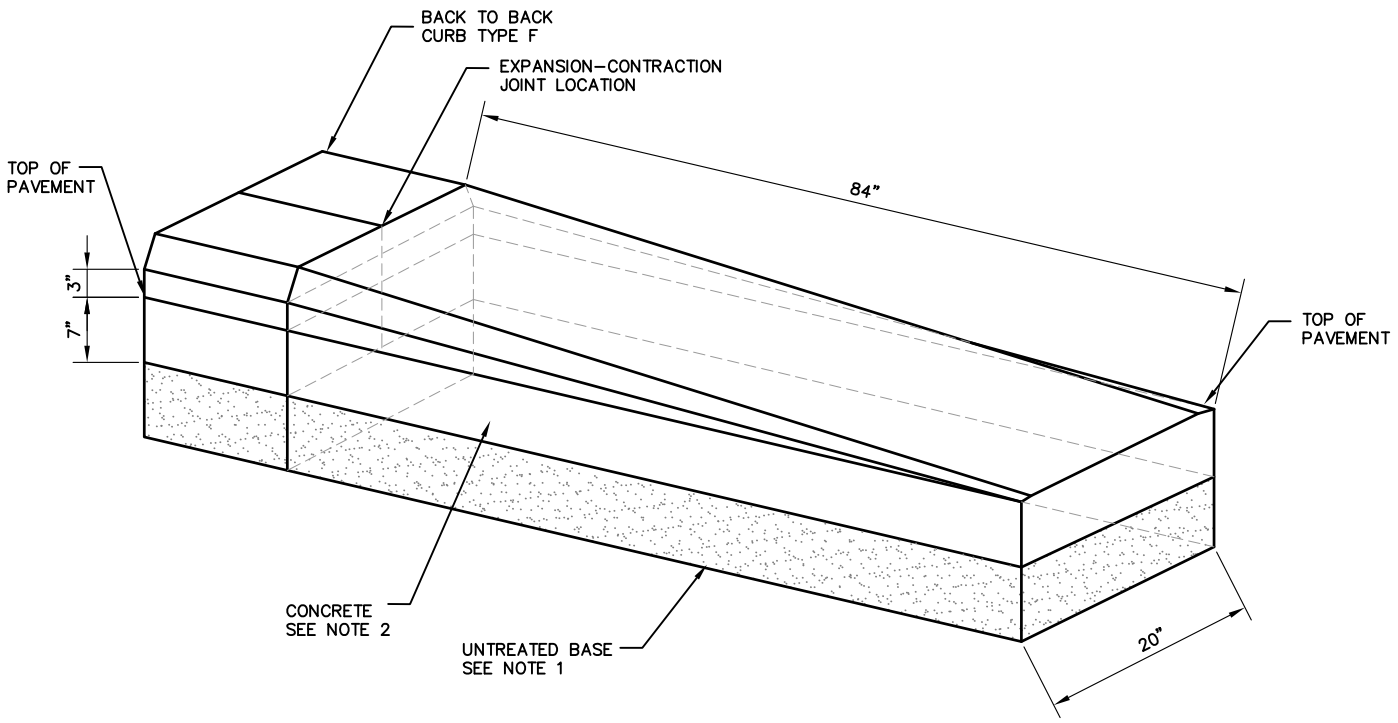

PLOWABLE END SECTION DETAIL

TYPE F CURB

NOTES:

1. UNTREATED BASE COURSE: USE CLASS A UNTREATED BASE COARSE GRADE 1 OR GRADE 3/4 PER APWA SECTION 32 11 23. USE OF SEWER ROCK OR RECYCLED AGGREGATE REQUIRES ENGINEER'S WRITTEN APPROVAL.

   A. PLACE BACKFILL MATERIAL PER APWA SECTION 32 05 10.
   B. COMPACT BACKFILL MATERIAL PER APWA SECTION 31 23 26 TO A MODIFIED PROCTOR DENSITY OF 95 PERCENT OR GREATER.

2. CONCRETE: CLASS 4000 PER APWA SECTION 03 30 04.

   A. IF NECESSARY, PROVIDE CONCRETE WHICH ACHIEVES DESIGN STRENGTH IN 72 HOURS (3 DAYS). USE CAUTION, HOWEVER, AS SPIDER CRACKS DEVELOP IF AIR TEMPERATURE EXCEEDS 90 DEGREES F.
   B. PLACE CONCRETE PER APWA SECTION 03 30 10.
   C. PROVIDE 1/2 INCH RADIUS ON ALL EXPOSED CONCRETE EDGES UNLESS OTHERWISE SHOWN.
   D. APPLY A SEALING/CURING COMPOUND PER APWA SECTION 03 39 00. (TYPE ID CLASS A; CLEAN WITH FUGITIVE DYE)
   E. PROTECT CONCRETE FROM PREMATURE DRYING, HOT OR COLD TEMPERATURES, GRAFFITI, AND MECHANICAL INJURY.
   F. REPLACE CONCRETE DAMAGED BY MECHANICAL INJURY, OR THAT DOES NOT CONFORM TO REQUIRED LEVELS, LINES, DETAILS AND ELEVATIONS.

3. EXPANSION JOINTS:

   A. PROVIDE FULL DEPTH 1/2 INCH THICK F1 JOINT FILLER MATERIAL PER APWA SECTION 32 13 73. SET TOP OF FILLER FLUSH WITH SURFACE OF CONCRETE. PLACE EXPANSION JOINTS EVERY 50 FEET.
   B. EXPANSION JOINTS ARE NOT REQUIRED IN SLIP FORM WORK EXCEPT AT THE START OR END OF THE WORK DAY, AND AT THE START OR END OF A STREET INTERSECTION CURB RADIUS RETURN.

4. CONTRACTION JOINTS: MAKE CONTRACTION JOINTS VERTICAL, AT LEAST 1/8" WIDE, AND 2 INCHES DEEP OR 1/4 SLAB THICKNESS IF THE SLAB IS GREATER THAN 8 INCHES THICK. PLACE CONTRACTION JOINTS EVERY 10 FEET.

5. REBAR: CONTRACTOR TO USE 3/4 INCH COATED DEFORMED DOWELS ON 5 FEET MAXIMUM CENTERS.

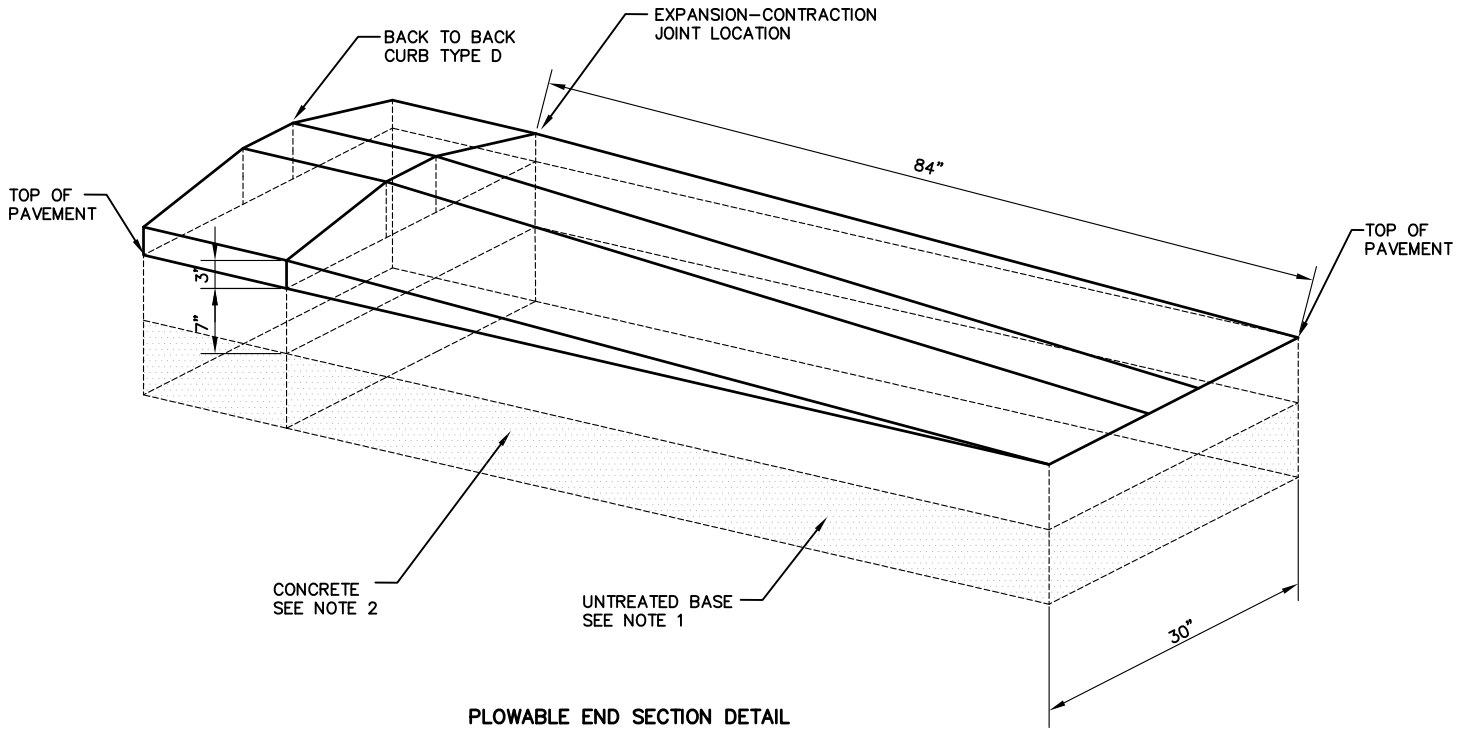

PLOWABLE END SECTION DETAIL
TYPE D CURB

NOTES:

1. UNTREATED BASE COURSE: USE CLASS A UNTREATED BASE COARSE GRADE 1 OR GRADE 3/4 PER APWA SECTION 32 11 23. USE OF SEWER ROCK OR RECYCLED AGGREGATE REQUIRES ENGINEER'S WRITTEN APPROVAL.

   A. PLACE BACKFILL MATERIAL PER APWA SECTION 32 05 10.
   B. COMPACT BACKFILL MATERIAL PER APWA SECTION 31 23 26 TO A MODIFIED PROCTOR DENSITY OF 95 PERCENT OR GREATER.

2. CONCRETE: CLASS 4000 PER APWA SECTION 03 30 04.

   A. IF NECESSARY, PROVIDE CONCRETE WHICH ACHIEVES DESIGN STRENGTH IN 72 HOURS (3 DAYS). USE CAUTION, HOWEVER, AS SPIDER CRACKS DEVELOP IF AIR TEMPERATURE EXCEEDS 90 DEGREES F.
   B. PLACE CONCRETE PER APWA SECTION 03 30 10.
   C. PROVIDE 1/2 INCH RADIUS ON ALL EXPOSED CONCRETE EDGES UNLESS OTHERWISE SHOWN.
   D. APPLY A SEALING/CURING COMPOUND PER APWA SECTION 03 39 00. (TYPE ID CLASS A; CLEAN WITH FUGITIVE DYE)
   E. PROTECT CONCRETE FROM PREMATURE DRYING, HOT OR COLD TEMPERATURES, GRAFFITI, AND MECHANICAL INJURY.
   F. REPLACE CONCRETE DAMAGED BY MECHANICAL INJURY, OR THAT DOES NOT CONFORM TO REQUIRED LEVELS, LINES, DETAILS AND ELEVATIONS.

3. EXPANSION JOINTS:

   A. PROVIDE FULL DEPTH 1/2 INCH THICK F1 JOINT FILLER MATERIAL PER APWA SECTION 32 13 73. SET TOP OF FILLER FLUSH WITH SURFACE OF CONCRETE. PLACE EXPANSION JOINTS EVERY 50 FEET.
   B. EXPANSION JOINTS ARE NOT REQUIRED IN SLIP FORM WORK EXCEPT AT THE START OR END OF THE WORK DAY, AND AT THE START OR END OF A STREET INTERSECTION CURB RADIUS RETURN.

4. CONTRACTION JOINTS: MAKE CONTRACTION JOINTS VERTICAL, AT LEAST 1/8" WIDE, AND 2 INCHES DEEP OR 1/4 SLAB THICKNESS IF THE SLAB IS GREATER THAN 8 INCHES THICK. PLACE CONTRACTION JOINTS EVERY 10 FEET.

5. REBAR: CONTRACTOR TO USE 3/4 INCH COATED DEFORMED DOWELS ON 5 FEET MAXIMUM CENTERS.

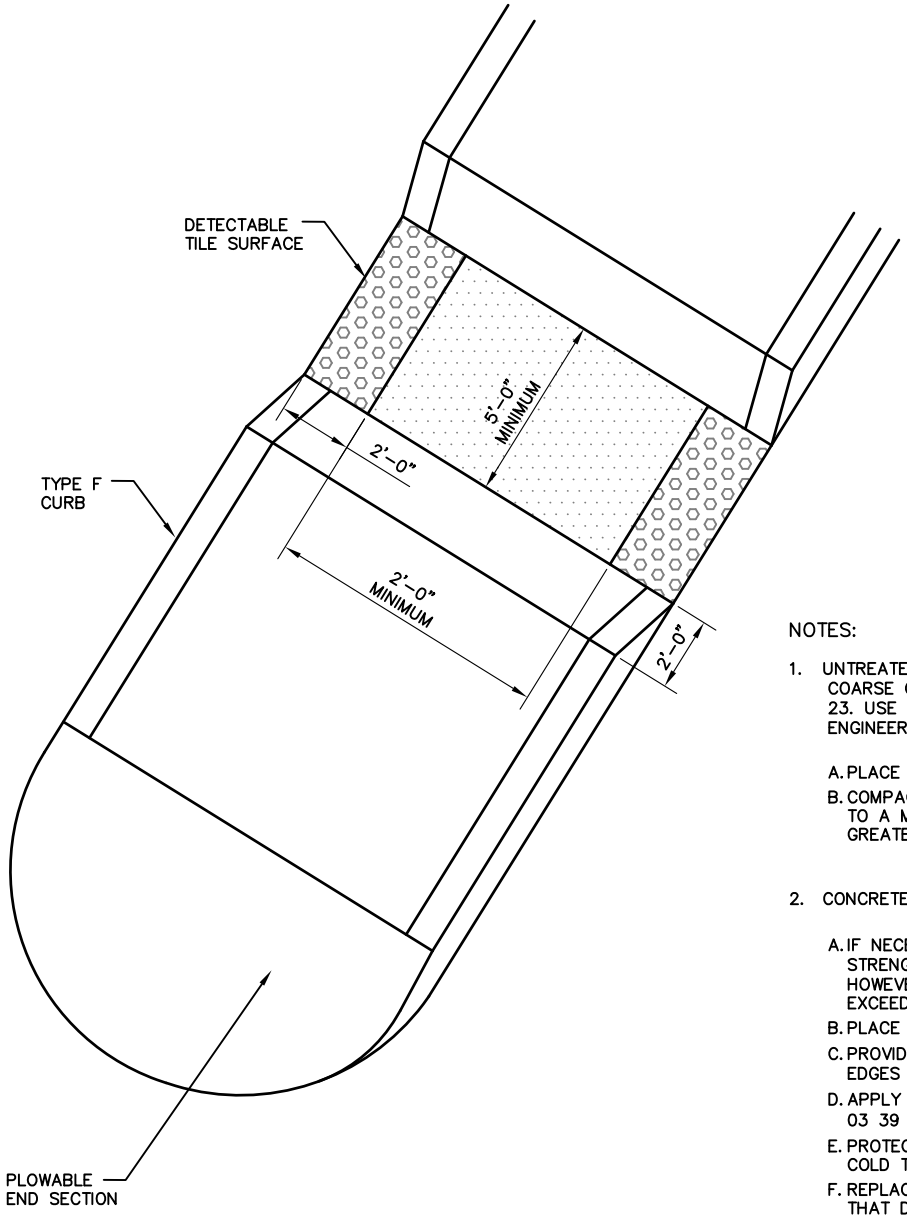

REFUGE ISLAND DETAIL

TYPE F CURB

NOTES:

1. UNTREATED BASE COURSE: USE CLASS A UNTREATED BASE COARSE GRADE 1 OR GRADE 3/4 PER APWA SECTION 32 11 23. USE OF SEWER ROCK OR RECYCLED AGGREGATE REQUIRES ENGINEER'S WRITTEN APPROVAL.

   A. PLACE BACKFILL MATERIAL PER APWA SECTION 32 05 10.
   B. COMPACT BACKFILL MATERIAL PER APWA SECTION 31 23 26 TO A MODIFIED PROCTOR DENSITY OF 95 PERCENT OR GREATER.

2. CONCRETE: CLASS 4000 PER APWA SECTION 03 30 04.

   A. IF NECESSARY, PROVIDE CONCRETE WHICH ACHIEVES DESIGN STRENGTH IN 72 HOURS (3 DAYS). USE CAUTION, HOWEVER, AS SPIDER CRACKS DEVELOP IF AIR TEMPERATURE EXCEEDS 90 DEGREES F.
   B. PLACE CONCRETE PER APWA SECTION 03 30 10.
   C. PROVIDE 1/2 INCH RADIUS ON ALL EXPOSED CONCRETE EDGES UNLESS OTHERWISE SHOWN.
   D. APPLY A SEALING/CURING COMPOUND PER APWA SECTION 03 39 00. (TYPE ID CLASS A; CLEAN WITH FUGITIVE DYE)
   E. PROTECT CONCRETE FROM PREMATURE DRYING, HOT OR COLD TEMPERATURES, GRAFFITI, AND MECHANICAL INJURY.
   F. REPLACE CONCRETE DAMAGED BY MECHANICAL INJURY, OR THAT DOES NOT CONFORM TO REQUIRED LEVELS, LINES, DETAILS AND ELEVATIONS.

3. EXPANSION JOINTS:

   A. PROVIDE FULL DEPTH 1/2 INCH THICK F1 JOINT FILLER MATERIAL PER APWA SECTION 32 13 73. SET TOP OF FILLER FLUSH WITH SURFACE OF CONCRETE. PLACE EXPANSION JOINTS EVERY 50 FEET.
   B. EXPANSION JOINTS ARE NOT REQUIRED IN SLIP FORM WORK EXCEPT AT THE START OR END OF THE WORK DAY, AND AT THE START OR END OF A STREET INTERSECTION CURB RADIUS RETURN.

4. CONTRACTION JOINTS: MAKE CONTRACTION JOINTS VERTICAL, AT LEAST 1/8" WIDE, AND 2 INCHES DEEP OR 1/4 SLAB THICKNESS IF THE SLAB IS GREATER THAN 8 INCHES THICK. PLACE CONTRACTION JOINTS EVERY 10 FEET.

5. REBAR: CONTRACTOR TO USE 3/4 INCH COATED DEFORMED DOWELS ON 5 FEET MAXIMUM CENTERS.

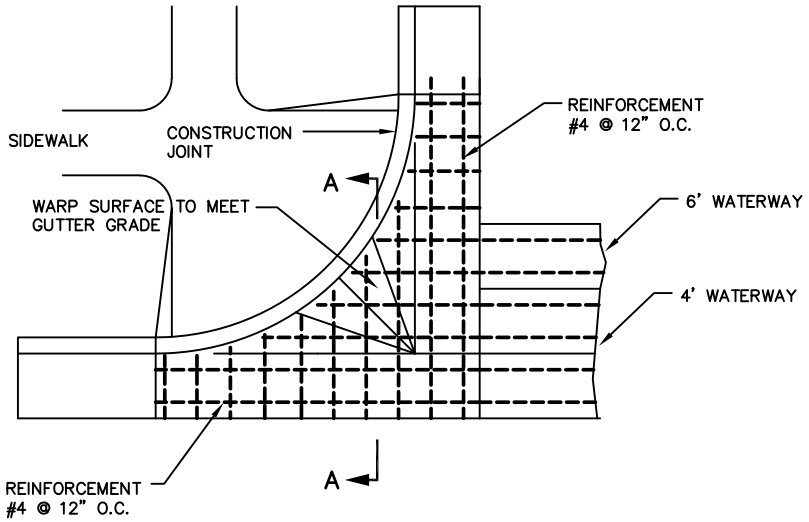

PLAN

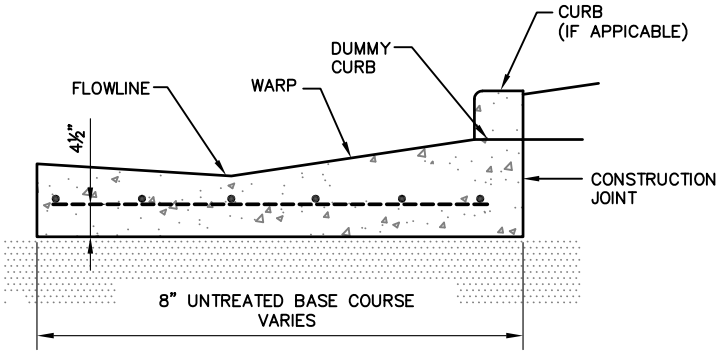

SECTION A – A
REPLACEMENT ONLY

NOTES:

1. UNTREATED BASE COURSE: USE CLASS A UNTREATED BASE COARSE GRADE 1 OR GRADE 3/4 PER APWA SECTION 32 11 23. USE OF SEWER ROCK OR RECYCLED AGGREGATE REQUIRES ENGINEER'S WRITTEN APPROVAL.
   A. PLACE BACKFILL MATERIAL PER APWA SECTION 32 05 10.
   B. COMPACT BACKFILL MATERIAL PER APWA SECTION 31 23 26 TO A MODIFIED PROCTOR DENSITY OF 95 PERCENT OR GREATER.

2. CONCRETE: CLASS 4000 PER APWA SECTION 03 30 04.
   A. IF NECESSARY, PROVIDE CONCRETE WHICH ACHIEVES DESIGN STRENGTH IN 72 HOURS (3 DAYS). USE CAUTION, HOWEVER, AS SPIDER CRACKS DEVELOP IF AIR TEMPERATURE EXCEEDS 90 DEGREES F.
   B. PLACE CONCRETE PER APWA SECTION 03 30 10 .
   C. PROVIDE 1/2 INCH RADIUS ON ALL EXPOSED CONCRETE EDGES UNLESS OTHERWISE SHOWN.
   D. APPLY A SEALING/CURING COMPOUND PER APWA SECTION 03 39 00. (TYPE ID CLASS A; CLEAR WITH FUGITIVE DYE)
   E. PROTECT CONCRETE FROM PREMATURE DRYING, HOT OR COLD TEMPERATURES, GRAFFITI, AND MECHANICAL INJURY.
   F. REPLACE CONCRETE DAMAGED BY MECHANICAL INJURY OR THAT DOES NOT CONFORM TO REQUIRED LEVELS, LINES, ELEVATIONS, OR DETAILS.

3. EXPANSION JOINTS:
   A. PROVIDE FULL DEPTH 1/2 INCH THICK F1 JOINT FILLER MATERIAL PER APWA SECTION 32 13 73. SET TOP OF FILLER FLUSH WITH SURFACE OF CONCRETE. PLACE EXPANSIONS JOINTS EVERY 50 FEET.
   B. EXPANSION JOINTS ARE NOT REQUIRED IN SLIP FORM WORK EXCEPT AT THE START OR END OF THE WORK DAY, AND AT THE START OR END OF A STREET INTERSECTION CURB RADIUS RETURN.

4. CONTRACTION JOINTS: MAKE CONTRACTION JOINTS VERTICAL, AT LEAST 1/8" WIDE, AND 2 INCHES DEEP OR 1/4 SLAB THICKNESS IF THE SLAB IS GREATER THAN 8 INCHES THICK. PLACE CONTRACTION JOINTS EVERY 10 FEET.

5. REINFORCEMENT: USE ASTM A 615, GRADE 60 EPOXY COATED DEFORMED STEEL REBAR. SEE APWA SECTION 03 20 00.

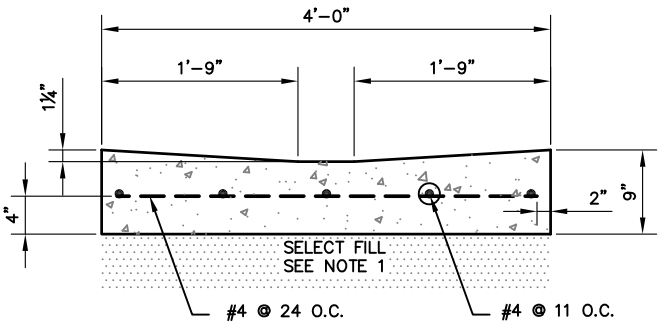

4' WATERWAY SECTION
REPLACEMENT ONLY

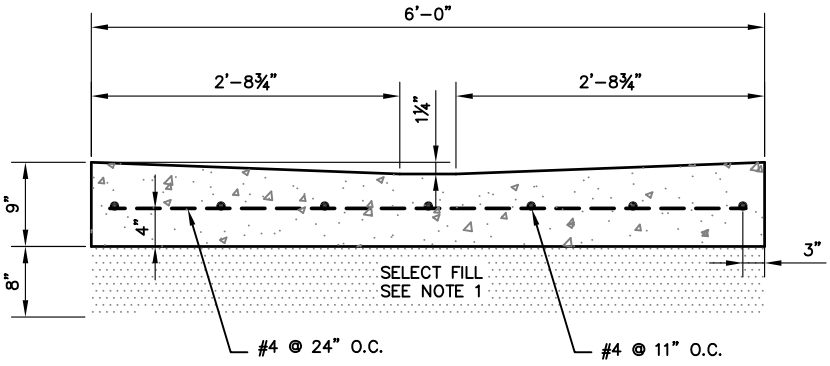

6' WATERWAY SECTION
REPLACEMENT ONLY

NOTES:

1. UNTREATED BASE COURSE: USE CLASS A UNTREATED BASE COARSE GRADE 1 OR GRADE 3/4 PER APWA SECTION 32 11 23. USE OF SEWER ROCK OR RECYCLED AGGREGATE REQUIRES ENGINEER'S WRITTEN APPROVAL.

   A. PLACE BACKFILL MATERIAL PER APWA SECTION 32 05 10.
   B. COMPACT BACKFILL MATERIAL PER APWA SECTION 31 23 26 TO A MODIFIED PROCTOR DENSITY OF 95 PERCENT OR GREATER. IN LIFTS NOT TO EXCEED EQUIPMENT COMPACTION CAPABILITY.

2. CONCRETE: CLASS 4000 PER APWA SECTION 03 30 04.

   A. IF NECESSARY, PROVIDE CONCRETE WHICH ACHIEVES DESIGN STRENGTH IN 72 HOURS (3 DAYS). USE CAUTION, HOWEVER, AS SPIDER CRACKS DEVELOP IF AIR TEMPERATURE EXCEEDS 90 DEGREES F.
   B. PLACE CONCRETE PER APWA SECTION 03 30 10 .
   C. PROVIDE 1/2" RADIUS ON ALL EXPOSED CONCRETE EDGES UNLESS OTHERWISE SHOWN.
   D. APPLY A SEALING/CURING COMPOUND PER APWA SECTION 03 39 00. (TYPE ID CLASS A; CLEAR WITH FUGITIVE DYE)
   E. PROTECT CONCRETE FROM PREMATURE DRYING, HOT OR COLD TEMPERATURES, GRAFFITI, AND MECHANICAL INJURY.
   F. REPLACE CONCRETE DAMAGED BY MECHANICAL INJURY OR THAT DOES NOT CONFORM TO REQUIRED LEVELS, LINES, DETAILS AND ELEVATIONS.

3. EXPANSION JOINTS:

   A. PROVIDE FULL DEPTH 1/2" THICK F1 JOINT FILLER MATERIAL PER APWA SECTION 32 13 73. SET TOP OF FILLER FLUSH WITH SURFACE OF CONCRETE. PLACE EXPANSIONS JOINTS EVERY 50 FEET.
   B. EXPANSION JOINTS ARE NOT REQUIRED IN SLIP FORM WORK EXCEPT AT THE START OR END OF THE WORK DAY, AND AT THE START OR END OF A STREET INTERSECTION CURB RADIUS RETURN.

4. CONTRACTION JOINTS: MAKE CONTRACTION JOINTS VERTICAL, AT LEAST 1/8" WIDE, AND 2 INCHES DEEP OR 1/4 SLAB THICKNESS IF THE SLAB IS GREATER THAN 8 INCHES THICK. PLACE CONTRACTION JOINTS EVERY 10 FEET.

5. REINFORCEMENT: USE ASTM A 615, GRADE 60 GALVANIZED OR EPOXY COATED DEFORMED STEEL REBAR. SEE APWA SECTION 03 20 00.

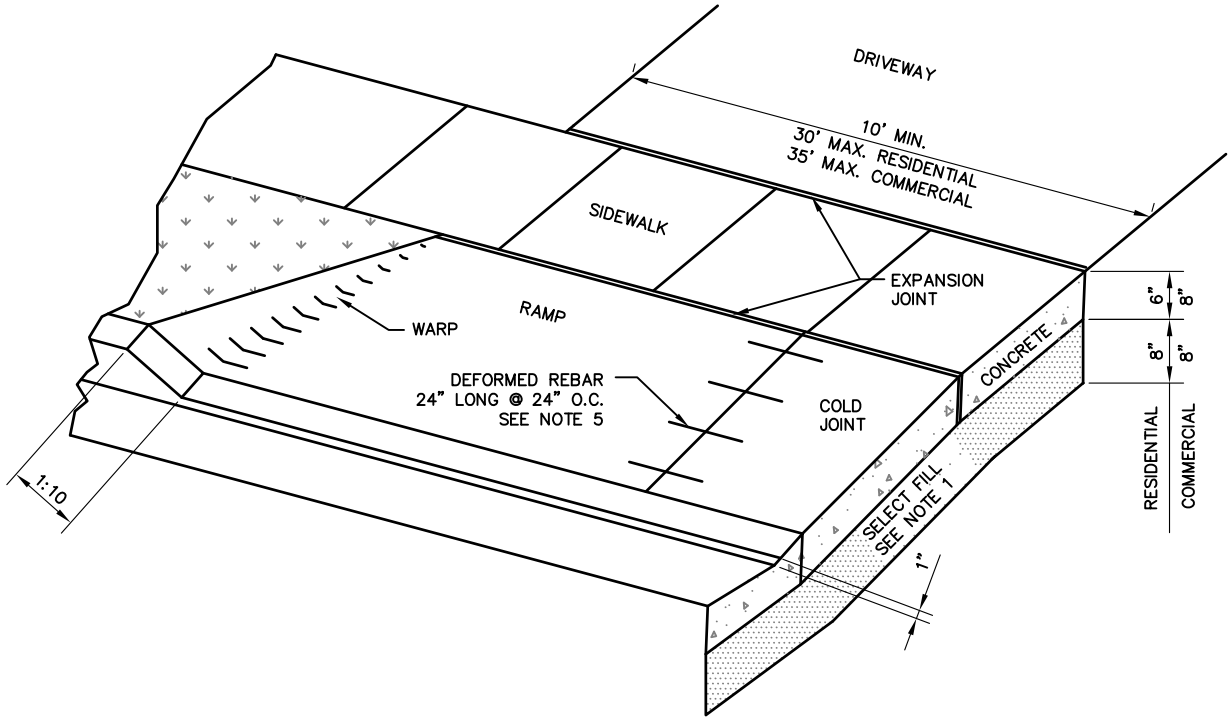

NOTES:

1. UNTREATED BASE COURSE: USE CLASS A UNTREATED BASE COARSE GRADE 1 OR GRADE 3/4 PER APWA SECTION 32 11 23. USE OF SEWER ROCK OR RECYCLED AGGREGATE REQUIRES ENGINEER'S WRITTEN APPROVAL.

   A. PLACE BACKFILL MATERIAL PER APWA SECTION 32 05 10.
   B. COMPACT BACKFILL MATERIAL PER APWA SECTION 31 23 26 TO A MODIFIED PROCTOR DENSITY OF 95 PERCENT OR GREATER. MINIMUM LIFT THICKNESS NOT TO EXCEED CAPABILITY OF COMPACTION EQUIPMENT.

2. CONCRETE: CLASS 4000 PER APWA SECTION 03 30 04.

   A. IF NECESSARY, PROVIDE CONCRETE WHICH ACHIEVES DESIGN STRENGTH IN 72 HOURS (3 DAYS). USE CAUTION, HOWEVER, AS SPIDER CRACKS DEVELOP IF AIR TEMPERATURE EXCEEDS 90 DEGREES F.
   B. PLACE CONCRETE PER APWA SECTION 03 30 10 .
   C. PROVIDE 1/2 INCH RADIUS ON ALL EXPOSED CONCRETE EDGES UNLESS OTHERWISE SHOWN.
   D. APPLY A SEALING/CURING COMPOUND PER APWA SECTION 03 39 00.
   E. PROTECT CONCRETE FROM PREMATURE DRYING, HOT OR COLD TEMPERATURES, GRAFFITI, AND MECHANICAL INJURY.
   F. REPLACED CONCRETE DAMAGED BY MECHANICAL INJURY OR THAT DOES NOT CONFORM TO REQUIRED LEVELS, LINES, DETAILS, AND ELEVATIONS.

3. EXPANSION JOINTS:

   A. PROVIDE FULL DEPTH 1/2 INCH THICK F1 JOINT FILLER MATERIAL PER APWA SECTION 32 13 73. SET TOP OF FILLER FLUSH WITH SURFACE OF CONCRETE. PLACE EXPANSION JOINTS EVERY 50 FEET.
   B. EXPANSION JOINTS ARE NOT REQUIRED IN SLIP FORM WORK EXCEPT AT THE START OR END OF THE WORK DAY, AND AT THE START OR END OF A STREET INTERSECTION CURB RADIUS RETURN.

4. CONTRACTION JOINTS: MAKE CONTRACTION JOINTS VERTICAL, AT LEAST 1/8" WIDE, AND 2 INCHES DEEP OR 1/4 SLAB THICKNESS IF THE SLAB IS GREATER THAN 8 INCHES THICK. PLACE CONTRACTION JOINTS EVERY 10 FEET.

5. REINFORCEMENT: USE ASTM A 615, GRADE 60 GALVANIZED OR EPOXY COATED DEFORMED STEEL REBAR. SEE APWA SECTION 03 20 00.

6. FINISH: BROOM FINISH.

7. SLOPE: CONSTRUCT DRIVEWAY WITH A POSITIVE SLOPE THAT DOES NOT EXCEED TEN PERCENT AND IS GREATER THAN 0.5 PERCENT.

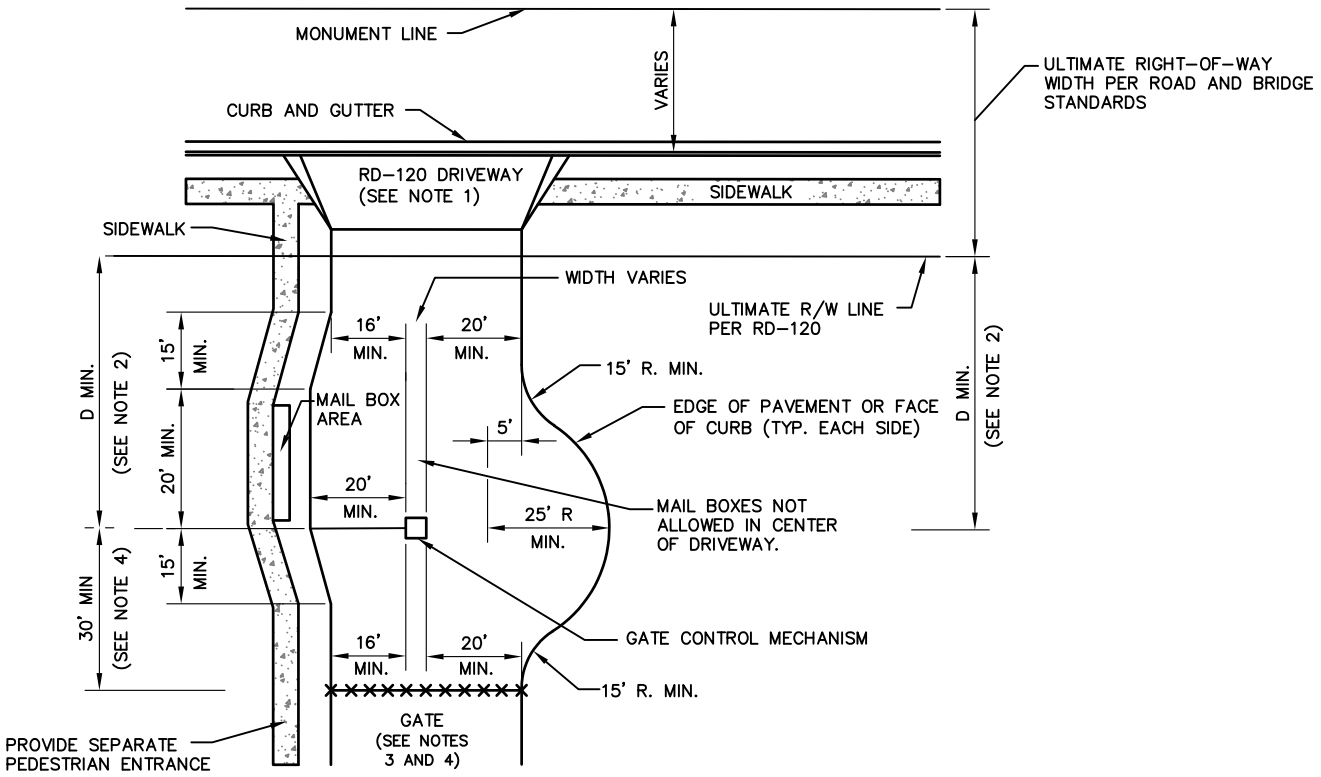

NOTES:

1. DRIVEWAY PER WEST JORDAN STANDARD DETAIL RD-120.
2. D MIN. FROM ULTIMATE R/W LINE PER RD-120 TO CENTERLINE OF GATE CONTROL MECHANISM. D MIN. VARIES IN ACCORDANCE TO DENSITY OF RESIDENTIAL DEVELOPMENT AS SHOWN BELOW:

DEVELOPMENT UNITS	D MIN.
LESS THEN 25	20'
25 TO 100	40'
100 TO 150	60'
151 TO 200	80'
GREATER THAN 200	100'

3. GATE INSTALLED AT BEGINNING OF 15' RADIUS.
4. 30' MIN. DIMENSION FROM CENTERLINE OF GATE CONTROL MECHANISM TO FACE TO GATE.
5. WHERE EXISTING CONDITIONS DEEM IT NECESSARY TO REQUEST A DESIGN EXCEPTION OF THE GATED ACCESS, THIS STANDARD MAY BE MODIFIED BY THE TRAFFIC ENGINEER.

DRAWING UPDATED AUGUST 2014

City of West Jordan, Utah

WEST JORDAN UTAH

TYPICAL DRIVEWAY ACCESS TO PRIVATE GATED COMMUNITY WITH EXTERNAL MAILBOX AREA

PLAN

RD121

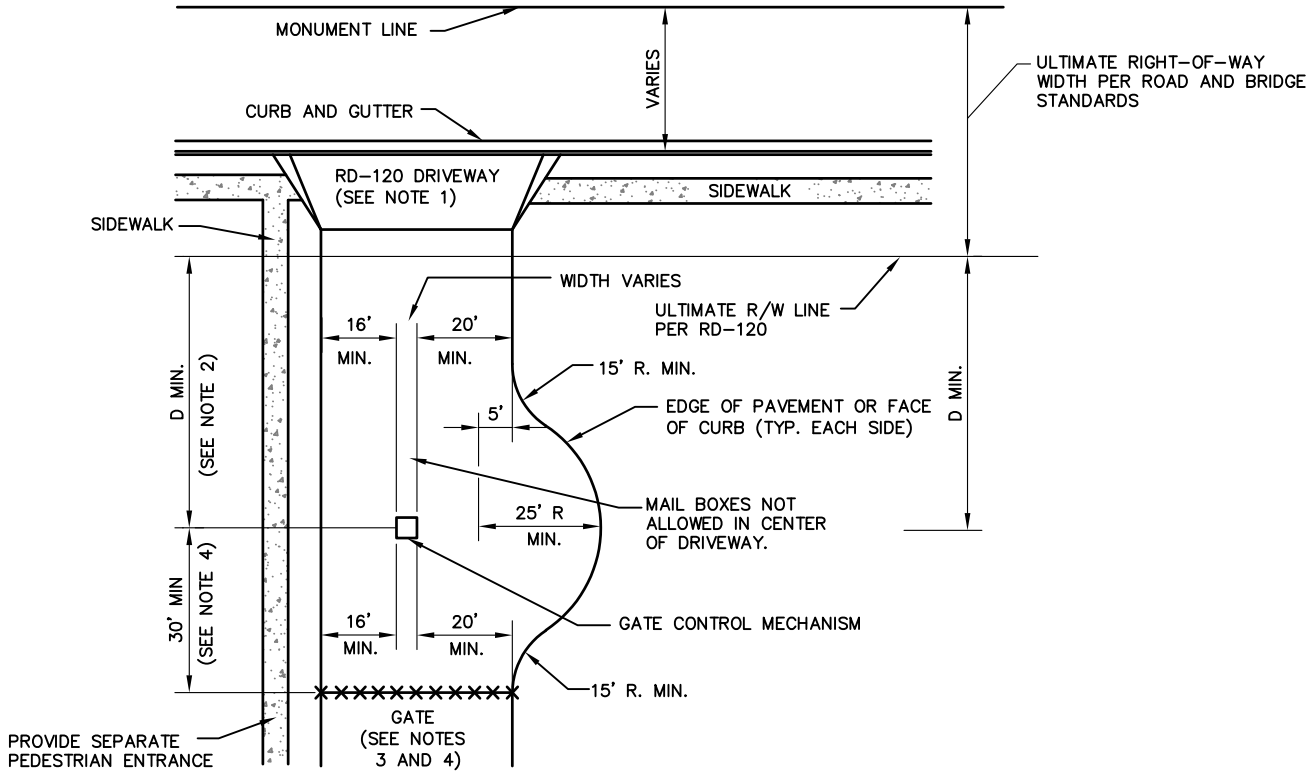

NOTES:

1. DRIVEWAY PER WEST JORDAN STANDARD DETAIL RD-120.
2. D MIN. FROM ULTIMATE R/W LINE PER RD-120 TO CENTERLINE OF GATE CONTROL MECHANISM. D MIN. VARIES IN ACCORDANCE TO DENSITY OF RESIDENTIAL DEVELOPMENT AS SHOWN BELOW:

DEVELOPMENT UNITS	D MIN.
LESS THEN 25	20'
25 TO 100	40'
100 TO 150	60'
151 TO 200	80'
GREATER THAN 200	100'

3. GATE INSTALLED AT BEGINNING OF 15' RADIUS.
4. 30' MIN. DIMENSION FROM CENTERLINE OF GATE CONTROL MECHANISM TO FACE TO GATE.
5. WHERE EXISTING CONDITIONS DEEM IT NECESSARY TO REQUEST A DESIGN EXCEPTION OF THE GATED ACCESS, THIS STANDARD MAY BE MODIFIED BY THE TRAFFIC ENGINEER.

DRAWING UPDATED AUGUST 2014

City of West Jordan, Utah

WEST JORDAN UTAH

TYPICAL ACCESS TO PRIVATE GATED COMMUNITY WITHOUT EXTERNAL MAILBOX AREA

PLAN

RD122

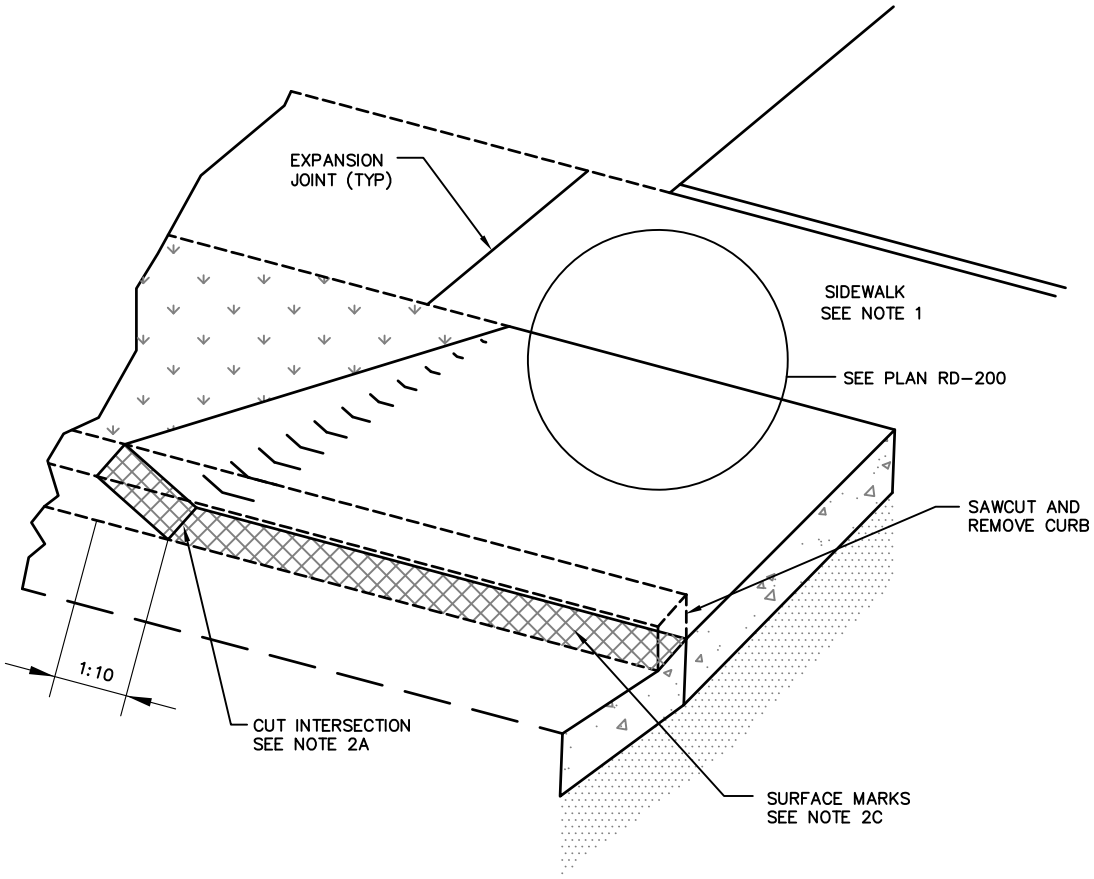

NOTES:

1. SIDEWALK:

   A. REMOVE AND REPLACE ALL DETERIORATED, WEAK OR UNSOUND CONCRETE.
   B. THICKNESS OF SIDEWALK AT DRIVEWAY RAMP TO MATCH THICKNESS OF DRIVEWAY RAMP.
   C. MATCH ELEVATION OF DRIVEWAY WALK TO THE NEAREST JOINT BEYOND THE WIDTH OF THE DRIVEWAY.

2. CURB CUTTING:

   A. NO OVER-CUTTING WHERE CUTS MERGE.
   B. BEVEL FRONT EDGE AT FLOWLINE OR HAVE SAWCUT MATCH FLOWLINE.
   C. GRIND SAWED SURFACES SO THAT NO BLADE MARKS APPEAR.
   D. 1-INCH MAXIMUM, 1-INCH MINIMUM LIP AT GUTTER EDGE.

3. EXPANSION JOINTS: PROVIDE FULL DEPTH 1/2 INCH THICK F1 JOINT FILLER MATERIAL PER APWA SECTION 32 13 73. SET TOP OF FILLER FLUSH WITH SURFACE OF CONCRETE.

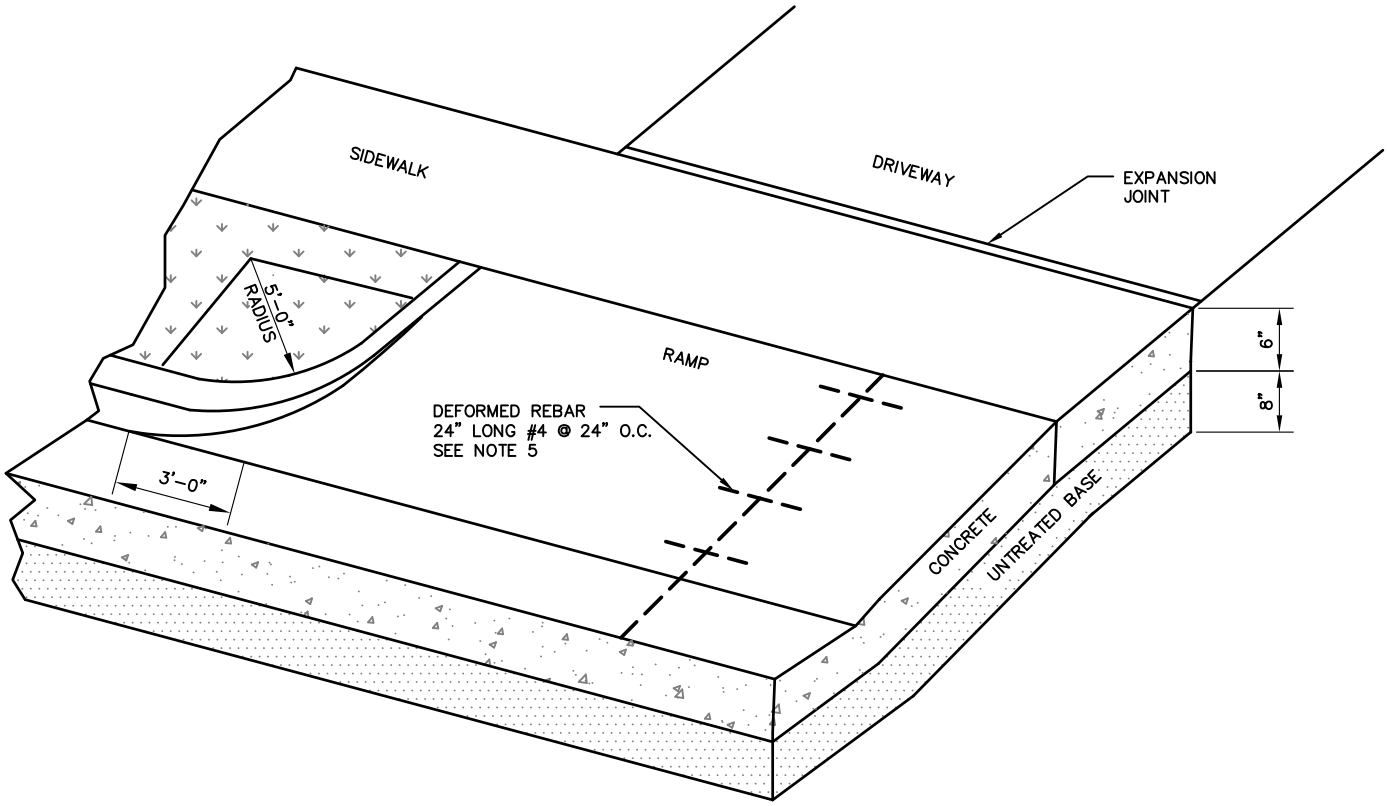

NOTES:

1. UNTREATED BASE COURSE: USE CLASS A UNTREATED BASE COARSE GRADE 1 OR GRADE 3/4 PER APWA SECTION 32 11 23. USE OF SEWER ROCK OR RECYCLED AGGREGATE REQUIRES ENGINEER'S WRITTEN APPROVAL.

   A. PLACE BACKFILL MATERIAL PER APWA SECTION 32 05 10.
   B. COMPACT BACKFILL MATERIAL PER APWA SECTION 31 23 26 TO A MODIFIED PROCTOR DENSITY OF 95 PERCENT OR GREATER. MINIMUM LIFT THICKNESS NOT TO EXCEED CAPABILITY OF COMPACTION EQUIPMENT.

2. CONCRETE: CLASS 4000 PER APWA SECTION 03 30 04.

   A. IF NECESSARY, PROVIDE CONCRETE WHICH ACHIEVES DESIGN STRENGTH IN 72 HOURS (3 DAYS). USE CAUTION, HOWEVER, AS SPIDER CRACKS DEVELOP IF AIR TEMPERATURE EXCEEDS 90 DEGREES F.
   B. PLACE CONCRETE PER APWA SECTION 03 30 10.
   C. PROVIDE 1/2 INCH RADIUS ON ALL EXPOSED CONCRETE EDGES UNLESS OTHERWISE SHOWN.
   D. APPLY A SEALING/CURING COMPOUND PER APWA SECTION 03 39 00.
   E. PROTECT CONCRETE FROM PREMATURE DRYING, HOT OR COLD TEMPERATURES, GRAFFITI, AND MECHANICAL INJURY.
   F. REPLACE CONCRETE DAMAGED BY MECHANICAL INJURY OR THAT DOES NOT CONFORM TO REQUIRED LEVELS, LINES, DETAILS AND ELEVATIONS.

3. EXPANSION JOINTS:

   A. PROVIDE FULL DEPTH 1/2 INCH THICK F1 JOINT FILLER MATERIAL PER APWA SECTION 32 13 73. SET TOP OF FILLER FLUSH WITH SURFACE OF CONCRETE. PLACE EXPANSION JOINTS EVERY 50 FEET.
   B. EXPANSION JOINTS ARE NOT REQUIRED IN SLIP FORM WORK EXCEPT AT THE START OR END OF THE WORK DAY, AND AT THE START OR END OF A STREET INTERSECTION CURB RADIUS RETURN.

4. CONTRACTION JOINTS: MAKE CONTRACTION JOINTS VERTICAL, AT LEAST 1/8" WIDE, AND 2 INCHES DEEP OR 1/4 SLAB THICKNESS IF THE SLAB IS GREATER THAN 8 INCHES THICK. PLACE CONTRACTION JOINTS EVERY 10 FEET.

5. REINFORCEMENT: IF COLD JOINT IS CONSTRUCTED IN THE DRIVE APPROACH, INSTALL ASTM A 615, GRADE 60 GALVANIZED OR EPOXY COATED DEFORMED STEEL REBAR. SEE APWA SECTION 03 20 00.

6. SLOPE: CONSTRUCT DRIVEWAY WITH A POSITIVE SLOPE THAT IS GREATER THAN TWO PERCENT AND DOES NOT EXCEED TEN PERCENT SLOPE.

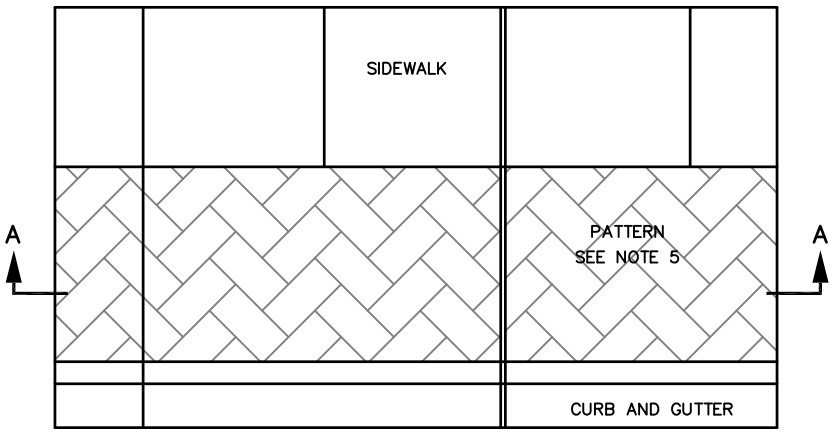

PLAN VIEW

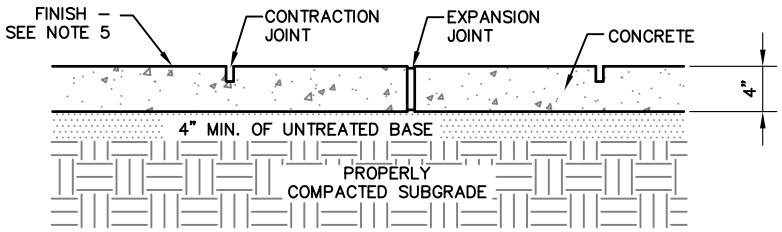

SECTION A – A

NOTES:

1. UNTREATED BASE COURSE: USE CLASS A UNTREATED BASE COARSE GRADE 1 OR GRADE 3/4 PER APWA SECTION 32 11 23. USE OF SEWER ROCK OR RECYCLED AGGREGATE REQUIRES ENGINEER'S WRITTEN APPROVAL.
   A. PLACE BACKFILL MATERIAL PER APWA SECTION 32 05 10.
   B. COMPACT BACKFILL MATERIAL PER APWA SECTION 31 23 26 TO A MODIFIED PROCTOR DENSITY OF 95 PERCENT OR GREATER.

2. CONCRETE: CLASS 4000 PER APWA SECTION 03 30 04.
   A. IF NECESSARY, PROVIDE CONCRETE WHICH ACHIEVES DESIGN STRENGTH IN 72 HOURS (3 DAYS). USE CAUTION, HOWEVER, AS SPIDER CRACKS DEVELOP IF AIR TEMPERATURE EXCEEDS 90 DEGREES F.
   B. PLACE CONCRETE PER APWA SECTION 03 30 10 .
   C. PROVIDE 1/2 INCH RADIUS ON ALL EXPOSED CONCRETE EDGES UNLESS OTHERWISE SHOWN.
   D. APPLY A SEALING/CURING COMPOUND PER APWA SECTION 03 39 00.
   E. PROTECT CONCRETE FROM PREMATURE DRYING, HOT OR COLD TEMPERATURES, GRAFFITI AND MECHANICAL INJURY.
   F. REPLACE CONCRETE DAMAGED BY MECHANICAL INJURY OR THAT DOES NOT CONFORM TO REQUIRED LEVELS, LINES, DETAILS AND ELEVATION.

3. EXPANSION JOINTS:
   A. PROVIDE FULL DEPTH 1/2 INCH THICK F1 JOINT FILLER MATERIAL PER APWA SECTION 32 13 73. SET TOP OF FILLER FLUSH WITH SURFACE OF CONCRETE. PLACE EXPANSION JOINTS EVERY 50 FEET.
   B. EXPANSION JOINTS ARE NOT REQUIRED IN SLIP FORM WORK EXCEPT AT THE START OR END OF THE WORK DAY, AND AT THE START OR END OF A STREET INTERSECTION CURB RADIUS RETURN.

4. CONTRACTION JOINTS: MAKE CONTRACTION JOINTS VERTICAL, AT LEAST 1/8" WIDE, AND 2 INCHES DEEP OR 1/4 SLAB THICKNESS IF THE SLAB IS GREATER THAN 8 INCHES THICK. PLACE CONTRACTION JOINTS EVERY 10 FEET.

5. PATTERN: PLACE UNIFORMLY OVER SURFACE USING RELEASE POWDER ON STAMPING MATS. STAMP TO A DEPTH OF 1/2 INCH. CLEAN FUGITIVE RELEASE POWDER FROM CONCRETE PRIOR TO APPLICATION OF CURING COMPOUND.

6. PATTERN DESIGN: ASHLAR CUT SLATE

7. COLORING: MATCH EXISTING INTEGRAL COLORING. NO BROADCASTING OF COLOR ON THE SURFACE OF THE CONCRETE. APPLY COLOR TO CONCRETE MIX PER MANUFACTURE REQUIRED RATIO.

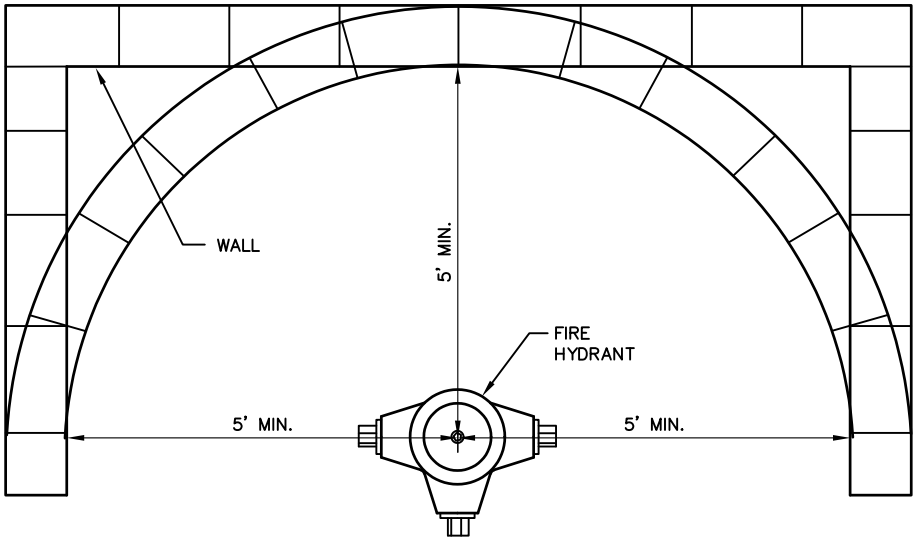

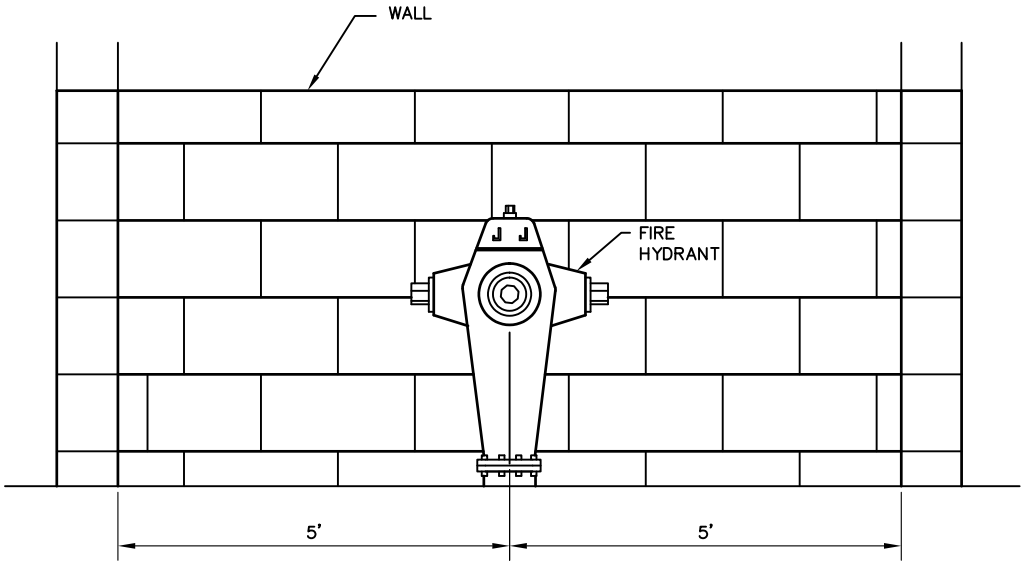

NOTES:

1. ALL RETAINING WALL EXCEEDING 48" IN HEIGHT REQUIRE BUILDING PERMIT.
2. PLANNED DEVELOPMENT (IE. RPD, HPD, DP, ETCT. PROJECTS MAY REQUIRE USE OF SPECIAL COLOR AND TEXTURE OF MATERIALS.

DRAWING UPDATED AUGUST 2014

City of West Jordan, Utah

WEST JORDAN UTAH

LOCATION OF FIRE HYDRANT WITHIN RETAINING WALL OR FENCE

PLAN

RD155

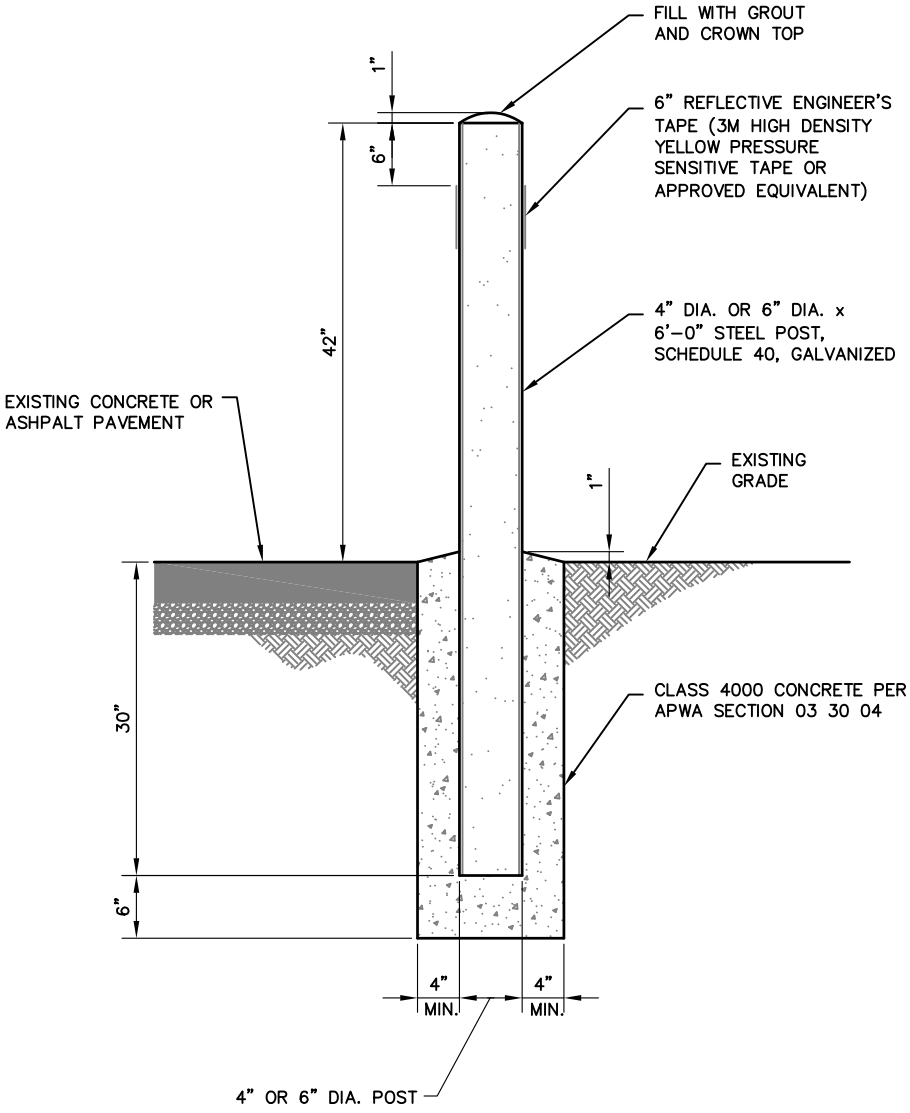

DRAWING UPDATED AUGUST 2014

City of West Jordan, Utah

WEST JORDAN UTAH

SAFETY POST

PLAN

RD165

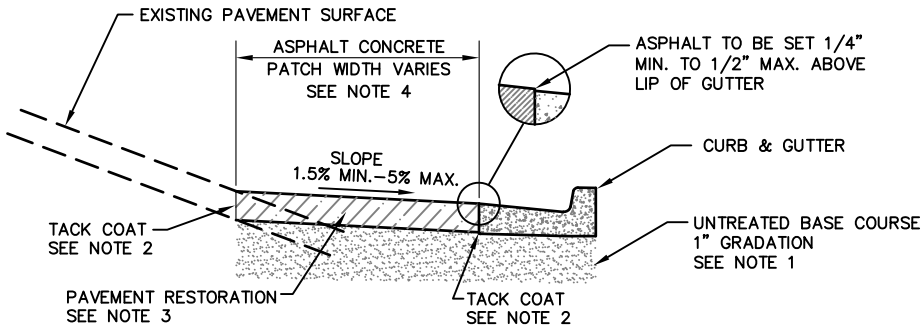

CASE 1 – POSITIVE STREET TIE–IN

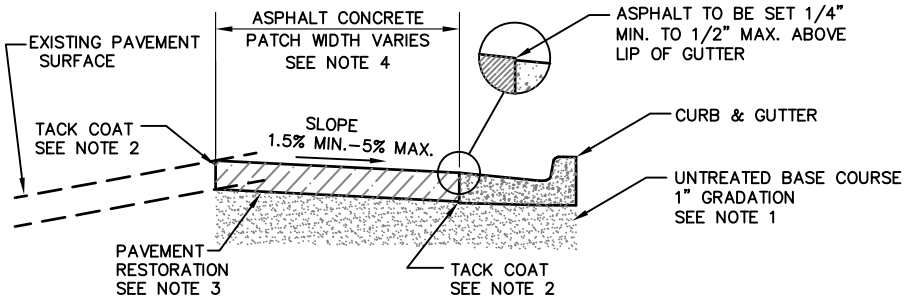

CASE 2 – NEGATIVE STREET TIE–IN

CONSTRUCTION NOTES:

1. NEW UNTREATED BASE COURSE: PROVIDE AGGREGATE CLASS "A" UNTREATED BASE COURSE MATERIAL SPECIFIED IN APWA SECTION 32 11 23. DO NOT USE GRAVEL OR SEWER ROCK. PLACE NEW MATERIAL PER APWA 32 05 10. COMPACT PER APWA SECTION 31 23 26 TO A MODIFIED PROCTOR DENSITY OF 95 PERCENT IN LIFTS NOT EXCEEDING 6 INCHES THICK AFTER COMPACTION. MATCH EXISTING THICKNESS.

2. TACK COAT: PLACE AS SPECIFIED IN APWA SECTION 32 12 13.13. PROVIDE FULL TACK COAT COVERAGE ON ALL VERTICAL SURFACES.

3. ASPHALT PAVEMENT: USE PG–64–34 DM 1/2 HOT MIX ASPHALT CONCRETE AS SPECIFIED IN APWA SECTION 33 12 05. RAP SHALL BE NO MORE THAN 15 PERCENT OF THE MIX. INSTALL PER APWA SECTION 32 12 16.13 IN MAXIMUM 3 INCH LIFTS. COMPACT TO 94 PERCENT OF ASTM D2041 (RICE METHOD) PLUS OR MINUS TWO PERCENT. ASPHALT PLACED AFTER APRIL 15 AND PRIOR TO MARCH 1 WILL BE CONSIDERED TEMPORARY AND MUST BE REPLACED AFTER MARCH 1. ASPHALT PATCH THICKNESS MUST MATCH EXISTING THICKNESS PLUS 1 INCH.

4. ADDITIONAL PAVEMENT REMOVAL: COLLECTOR OR ARTERIAL STREETS – REMOVE ADDITIONAL PAVEMENT TO A PAINTED LANE STRIPE, A LIP OF GUTTER OR AN EDGE OF THE PAVEMENT. RESIDENTIAL STREETS – REMOVE ADDITIONAL PAVEMENT FROM THE LIP OF GUTTER TO THE CENTER OF THE STREET. THE CITY RESERVES THE RIGHT TO REQUIRE ADDITIONAL PAVEMENT RESTORATION IF DEEMED APPROPRIATE TO RESTORE THE ROADWAY TO THE ORIGINAL CONDITION.

5. JOINTS: SAW CUT ASPHALT TO PROVIDE A NEAT STRAIGHT JOINT BETWEEN THE EXISTING AND NEW ASPHALT CONCRETE SURFACES.

ASPHALT TRENCH RESTORATION

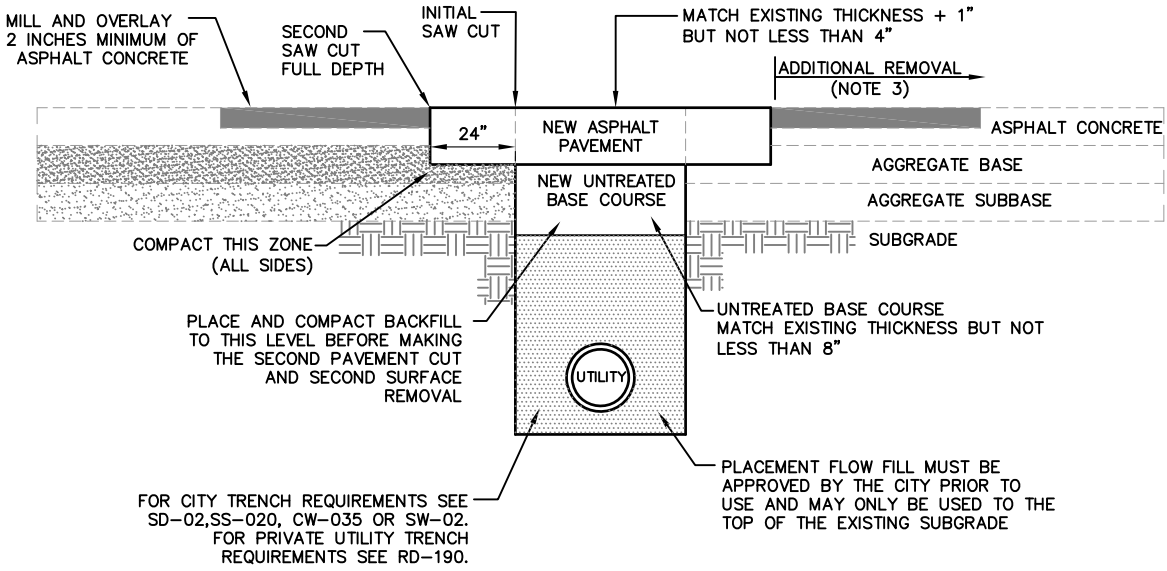

ASPHALT TRENCH RESTORATION CONSTRUCTION NOTES

1. ENCROACHMENT PERMIT: ALL WORK INSIDE WEST JORDAN RIGHT OF WAY REQUIRES AN APPROVED ENCROACHMENT PERMIT. COPY OF PERMIT SHALL BE HELD ON-SITE.

2. INSPECTION REQUIREMENTS: CITY MUST BE NOTIFIED FOR THE FOLLOWING INSPECTION APPOINTMENTS 48 HOURS IN ADVANCE:

A. NOSE-ON OR TAP.
B. BACKFILL AND COMPACTION.
C. ROAD BASE COMPACTION.
D. PREPARATION OF SURFACE FOR ASPHALT.
E. ASPHALT PLACEMENT AND COMPACTION.

SURFACE RESTORATION SHALL BE DONE WITHIN 48 HOURS OF EXCAVATION. UNLESS OTHERWISE APPROVED BY THE CITY. TRAFFIC SHALL NOT BE PLACED ON UNTREATED BASE UNLESS APPROVED BY THE CITY. CONTRACTOR SHALL COVER ALL UNATTENDED EXCAVATIONS WITH STEEL PLATES.

CONTRACTOR SHALL PROVIDE THE CITY WITH A COPY OF THE DENSITY TESTING RESULTS PRIOR TO ASPHALT PLACEMENT.

3. ADDITIONAL PAVEMENT REMOVAL:

A. PARALLEL TRENCH : COLLECTOR OR ARTERIAL STREETS – REMOVE ADDITIONAL PAVEMENT TO A PAINTED LANE STRIPE, A LIP OF GUTTER OR AN EDGE OF THE PAVEMENT. RESIDENTIAL STREETS – REMOVE ADDITIONAL PAVEMENT FROM THE LIP OF GUTTER TO THE CENTER OF THE STREET. THE CITY RESERVES THE RIGHT TO REQUIRE ADDITIONAL PAVEMENT RESTORATION IF DEEMED APPROPRIATE TO RESTORE THE ROADWAY TO THE ORIGINAL CONDITION.

B. PERPENDICULAR TRENCH: REPAIR TRENCH AS DESCRIBED IN THE STANDARD PLAN. MILL AND OVERLAY PAVEMENT 10 FEET EACH WAY FROM THE EDGE OF THE SECOND SAW CUT. CONTRACTOR SHALL COMBINE MULTIPLE TRENCH CUTS INTO ONE RESTORATION PATCH. THE CITY RESERVES THE RIGHT TO REQUIRE ADDITIONAL PAVEMENT RESTORATION GREATER THAN 10 FEET IF DEEMED APPROPRIATE TO RESTORE THE ROADWAY TO THE ORIGINAL CONDITION.

4. NEW UNTREATED BASE COURSE: PROVIDE AGGREGATE CLASS "A" UNTREATED BASE COURSE MATERIAL SPECIFIED IN APWA SECTION 32 11 23. DO NOT USE GRAVEL OR SEWER ROCK. PLACE NEW MATERIAL PER APWA 32 05 10. COMPACT PER APWA SECTION 31 23 26 TO A MODIFIED PROCTOR DENSITY OF 95 PERCENT IN LIFTS NOT EXCEEDING 6 INCHES THICK AFTER COMPACTION.

5. TACK COAT: PLACE AS SPECIFIED IN APWA SECTION 32 12 13.13. PROVIDE FULL TACK COAT COVERAGE ON ALL VERTICAL SURFACES.

6. ASPHALT PAVEMENT: USE PG-64-34 DM 1/2 HOT MIX ASPHALT CONCRETE AS SPECIFIED IN APWA SECTION 33 12 05. RAP SHALL BE NO MORE THAN 15 PERCENT OF THE MIX. INSTALL PER APWA SECTION 32 12 16.13 IN MAXIMUM 3 INCH LIFTS. COMPACT TO 94 PERCENT OF ASTM D2041 (RICE METHOD) PLUS OR MINUS TWO PERCENT. ASPHALT PLACED AFTER APRIL 15 AND PRIOR TO MARCH 1 WILL BE CONSIDERED TEMPORARY AND MUST BE REPLACED AFTER MARCH 1.

7. PATCH REPAIRS: REPAIR THE FOLLOWING CONDITIONS DURING THE CORRECTION PERIOD.

A. PAVEMENT SURFACE DISTORTION EXCEEDS 1/4 INCH DEVIATION IN 10 FEET. REPAIR OPTION: PLANE OFF SURFACE DISTORTIONS. COAT WITH AN EMULSION THAT COMPLIES WITH APWA 32 12 03 AND PROVIDE SAND BLOTTER.
B. CRACKS 1/4 WIDE AND 1 FOOT LONG OCCUR MORE OFTEN THAN 1 IN 10 SQUARE FEET. REPAIR OPTION: CRACK SEAL PER APWA 32 01 17.
C. ASPHALT RAVELING IS GREATER THAN 1 SQUARE FOOT IN 10 SQUARE FEET. REPAIR OPTION: MILL AND INLAY.

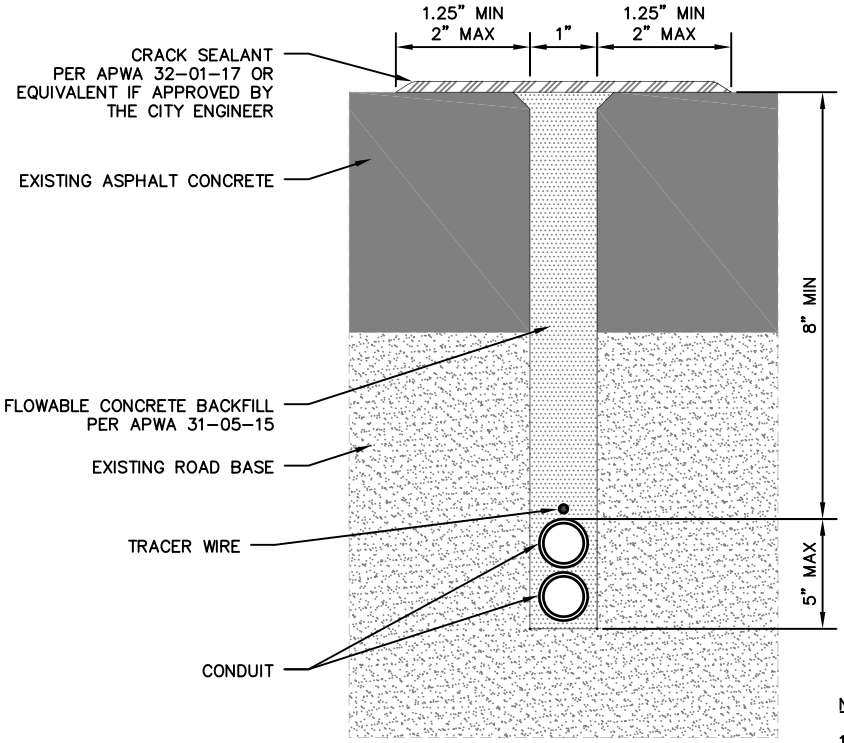

1" WIDE , 8" COVER, ASPHALT BOTH SIDES

NOTES:

1. BACKFILL MUST BE PLACED AS SOON AS PRACTICABLE AFTER PLACEMENT OF CONDUIT.
2. WHEN EXISTING ASPHALT EXCEEDS 8" THICK, TOP OF CONDUIT TO BE PLACED AT BASE OF ASPHALT.
3. EXCAVATION SHALL OCCUR ON THE OPPOSITE SIDE OF THE ROADWAY AS THE WATERLINE WHERE POSSIBLE.
4. A MINIMUM OFFSET OF 18" SHALL BE USED AROUND MANHOLES OR OTHER SIMILAR CONFLICTS WHEN ENCOUNTERED.

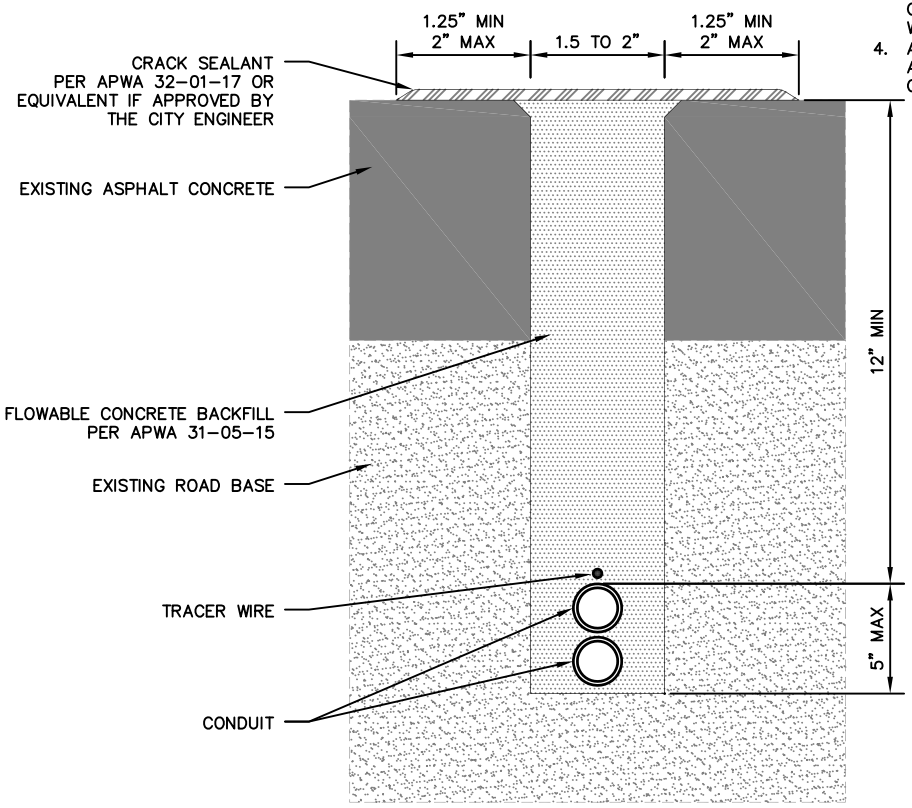

1.5" TO 2" WIDE , 12" COVER, ASPHALT BOTH SIDES

DRAWING CREATED OCTOBER 2021

City of West Jordan, Utah

WEST JORDAN UTAH

NARROW TRENCH EXCAVATION ASPHALT BOTH SIDES

PLAN

RD-176

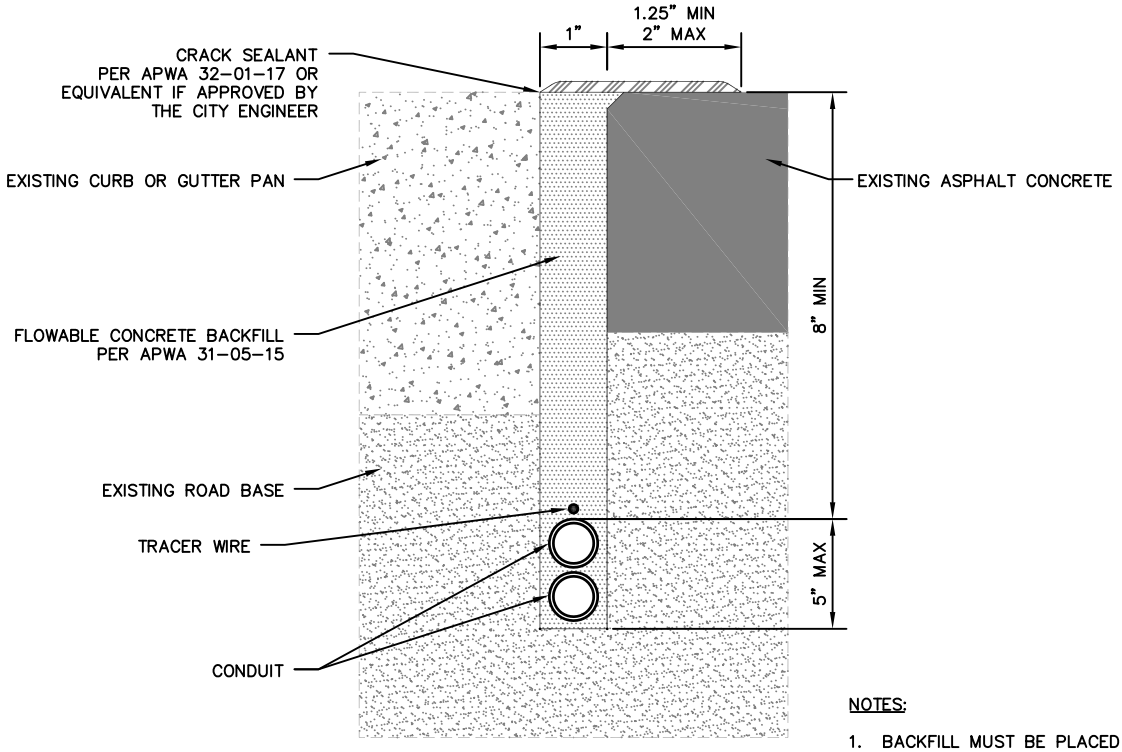

1" WIDE , 8" COVER, ASPHALT BOTH SIDES

NOTES:

1. BACKFILL MUST BE PLACED AS SOON AS PRACTICABLE AFTER PLACEMENT OF CONDUIT.
2. WHEN EXISTING ASPHALT EXCEEDS 8" THICK, TOP OF CONDUIT TO BE PLACED AT BASE OF ASPHALT.
3. EXCAVATION SHALL OCCUR ON THE OPPOSITE SIDE OF THE ROADWAY AS THE WATERLINE WHERE POSSIBLE.
4. A MINIMUM OFFSET OF 18" SHALL BE USED AROUND MANHOLES OR OTHER SIMILAR CONFLICTS WHEN ENCOUNTERED.

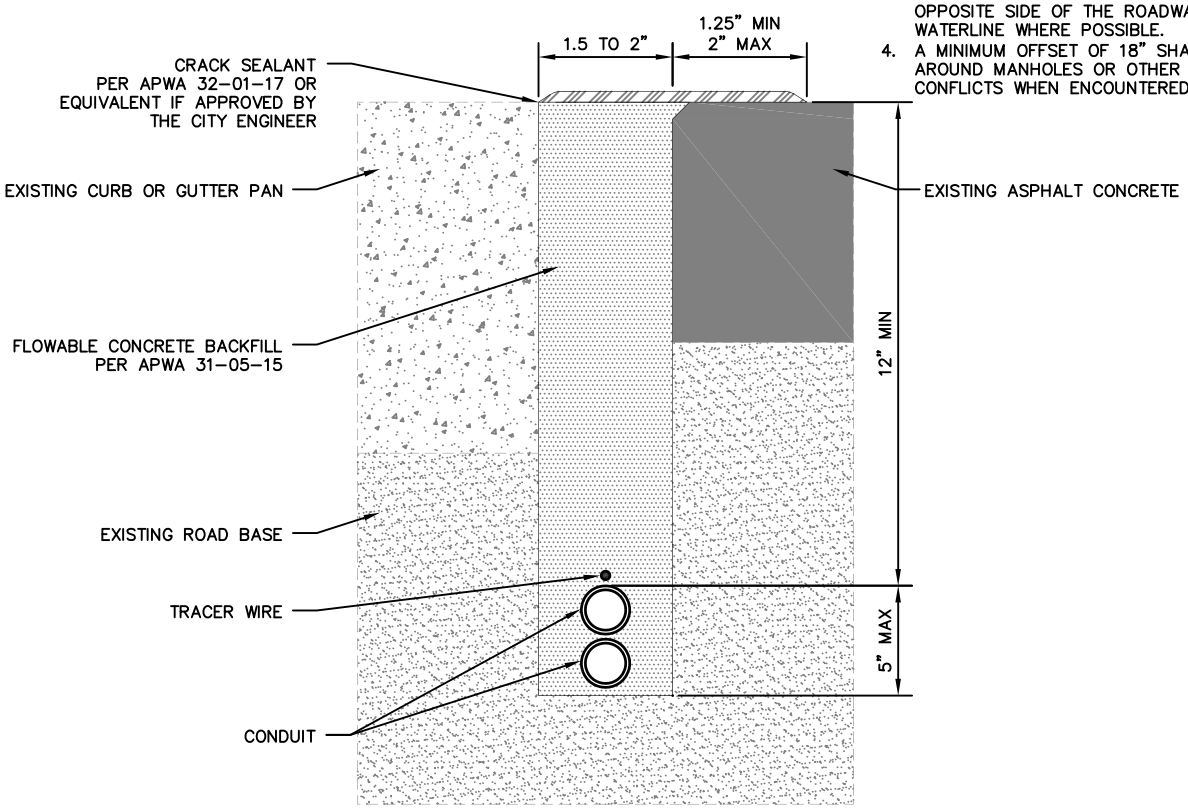

1.5" TO 2" WIDE , 12" COVER, ASPHALT BOTH SIDES

DRAWING CREATED OCTOBER 2021

City of West Jordan, Utah

WEST JORDAN UTAH

NARROW TRENCH EXCAVATION CURB AND GUTTER SEAM

PLAN

RD-177

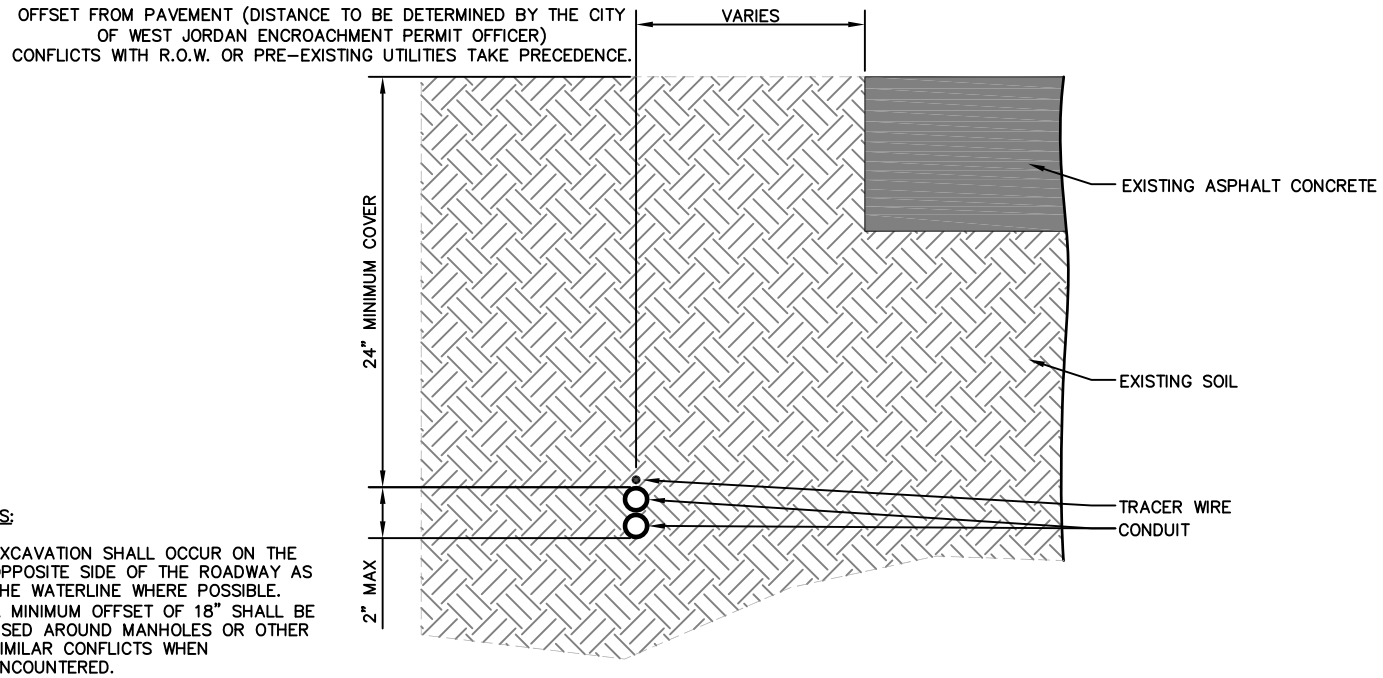

NOTES:

1. EXCAVATION SHALL OCCUR ON THE OPPOSITE SIDE OF THE ROADWAY AS THE WATERLINE WHERE POSSIBLE.
2. A MINIMUM OFFSET OF 18" SHALL BE USED AROUND MANHOLES OR OTHER SIMILAR CONFLICTS WHEN ENCOUNTERED.

SOFTSCAPE WITH ONE TO TWO MICRODUCTS

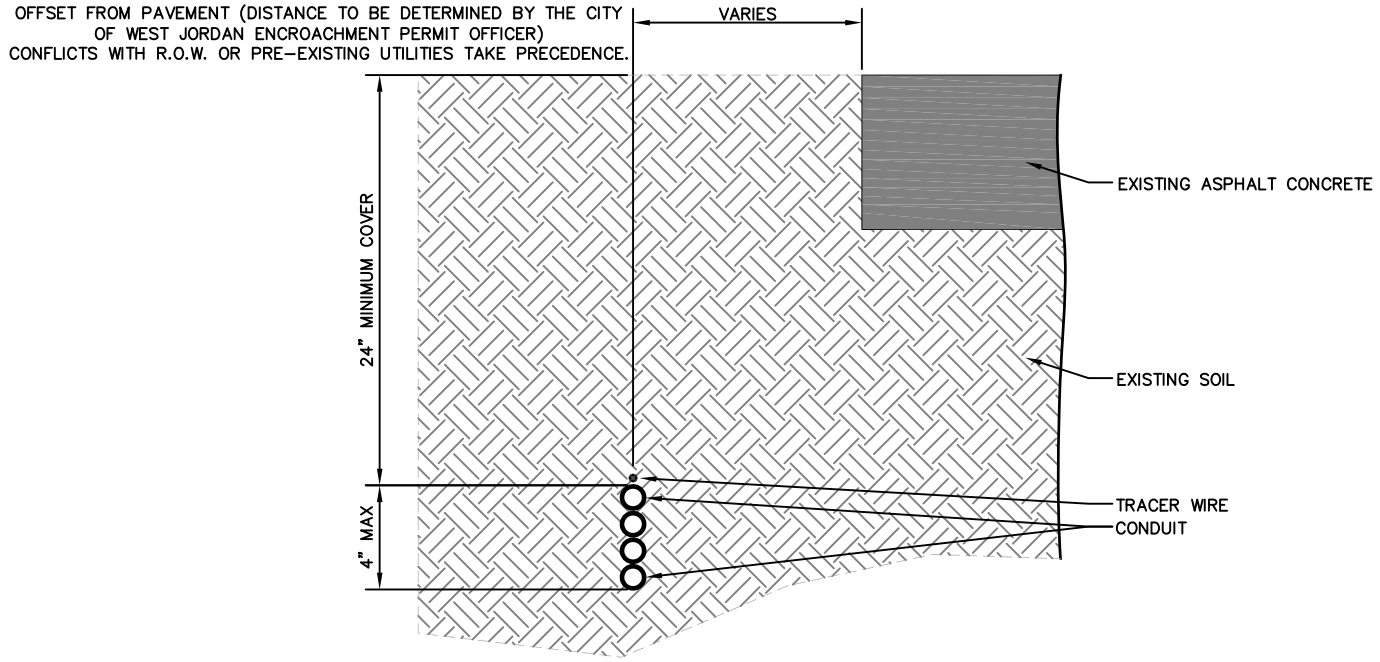

SOFTSCAPE WITH THREE TO FOUR MICRODUCTS

DRAWING CREATED OCTOBER 2021

City of West Jordan, Utah

WEST JORDAN UTAH

NARROW TRENCH EXCAVATION SOFTSCAPE MICRODUCTS

PLAN

RD-178

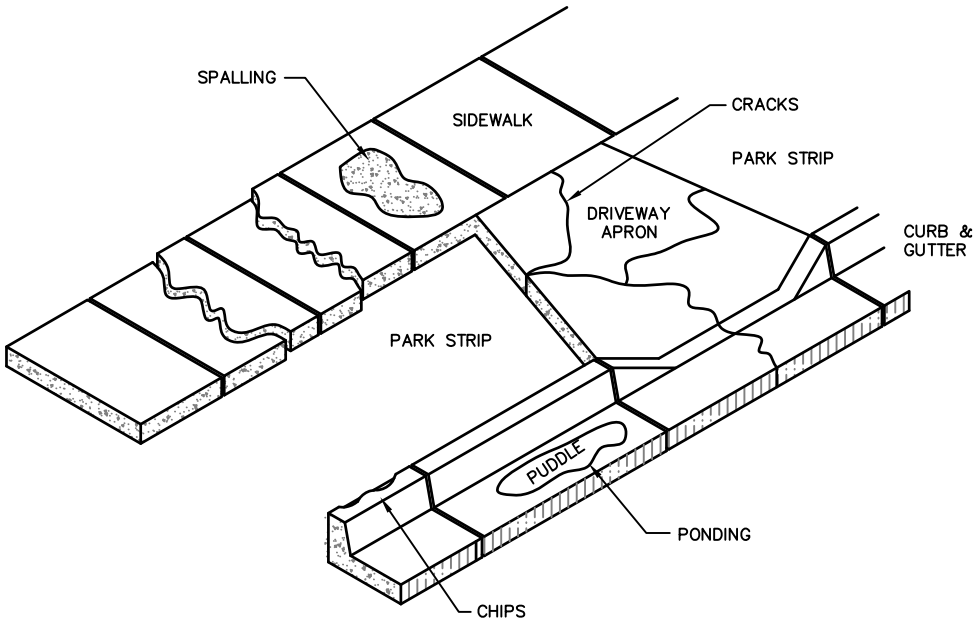

NOTES:

1. CURB & GUTTER:

   A. CRACKS: CRACKS WHICH INDICATE STRUCTURAL FAILURE OR SETTLING, OR WHICH RESULT IN VERTICAL DISPLACEMENT ARE CAUSE FOR REJECTION. CRACKS WHICH ARE CLEARLY SHRINKAGE CRACKS WHICH HAVE NOT OPENED UP, AND WHICH DO NOT IMPEDE FLOW OF WATER ARE NOT CAUSE FOR REMOVAL. CRACKS WHICH EXHIBIT MULTIPLE TRACES, OR WHICH RESULT IN CHIPPING OR FLAKING ADJACENT TO THE CRACK, ARE NOT CONSIDERED SHRINKAGE CRACKS.

   B. SPALLING: MINOR, OCCASIONAL SPALLING IS NOT CAUSE FOR REJECTION, IF SPALLING OCCURS OVER MORE THAN 15% OF A SECTION, THE ENTIRE SECTION SHOULD BE REPLACED.

   C. PONDING: STANDING WATER REQUIRES REPLACEMENT OF SUFFICIENT CURB AND GUTTER TO CORRECT THE PROBLEM.

   D. CHIPS: CHIPS WHICH DON'T AFFECT THE STRUCTURAL INTEGRITY OF THE SECTION OR IMPED THE NORMAL FLOW OF WATER MAY USUALLY BE LEFT. GENERALLY, CHIPS ON THE BACK OF THE CURB LESS THAN 1 – 1/2" IN WIDTH OR DEPTH, WHICH DON'T COMPRISE MORE THAN 25% OF THE LENGTH OF A SECTION MAY BE LEFT. CHIPS IN THE APRON, AWAY FROM THE FLOW LINE MAY USUALLY BE LEFT, PROVIDED THEY DON'T DIRECT WATER INTO THE SUBGRADE.

   E. COMBINATIONS: WHILE ANY OF THE ABOVE ITEMS MAY NOT RESULT IN REJECTION A SINGLE SECTION WHICH EXHIBITS MULTIPLE SUCH ITEMS MAY BE REJECTED.

2. SIDEWALKS: SIMILAR TO CURB AND GUTTER, EXCEPT THAT CHIPS OR SERIOUS SPALLS WHICH, IN THE OPINION OF THE INSPECTOR MAY CAUSE A TRIPPING HAZARD, WILL REQUIRE REPLACEMENT OF THE SECTION. CHIPS WHICH EXTEND LESS THAN 1–1/2" INTO THE SIDEWALK FROM THE EDGE ARE GENERALLY NOT CAUSE FOR REJECTION, UNLESS SUCH CHIPS OCCUR OVER MORE THAN 25% OF THE LENGTH OF THE SECTION. SIDEWALKS WHICH EXTEND MORE THAN 50 FEET WITHOUT AN EXPANSION JOINT WILL REQUIRE REMOVAL AND REPLACEMENT OF A SECTION; REPLACEMENT SHALL INCLUDE EXPANSION JOIN T.

3. CONCRETE PATCHING IS NOT PERMITTED. ALL DEFECTIVE CONCRETE TO BE REMOVED AND REPLACED.

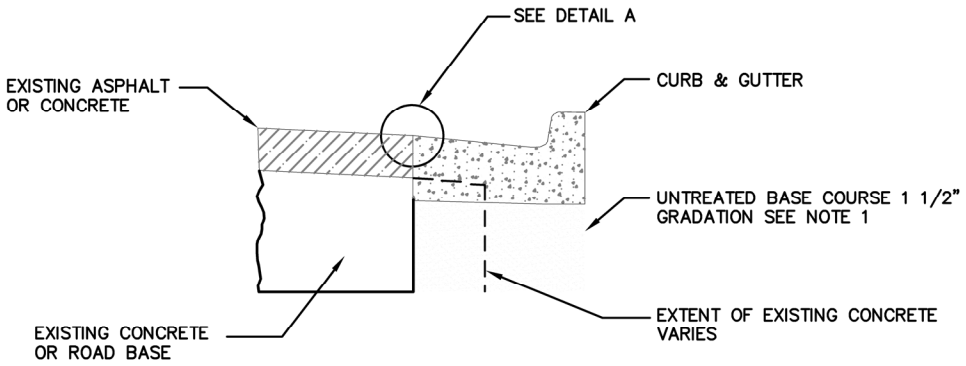

SECTION

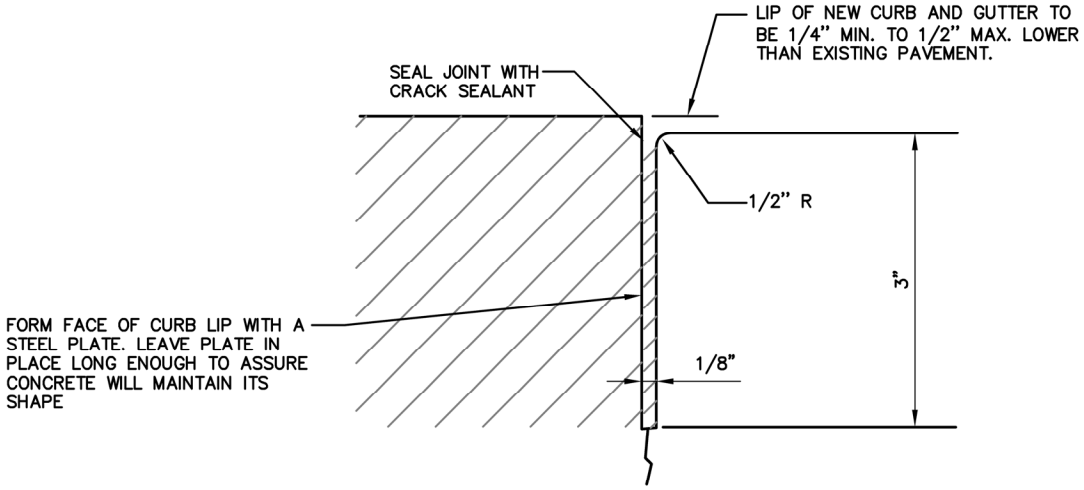

DETAIL A

NOTES:

1. BACK FILL: INSTALL ALL BACK FILL IN LIFTS NOT EXCEEDING 6" AFTER COMPACTION. COMPACT EACH LIFT TO A MINIMUM DRY DENSITY OF 95% OF OPTIMUM.
2. JOINTS: PROVIDE A NEAT STRAIGHT JOINT BETWEEN EXISTING AND NEW ASPHALT PAVEMENT SURFACES. SAW CUT JOINT IF EXISTING PAVEMENT EXCEEDS 3 INCHES IN THICKNESS, OR IF CONCRETE UNDERLIES ASPHALT PAVEMENT.
3. ROAD BASE THICKNESS: MATCH EXISTING ROAD BASE OR A MINIMUM OF 8 INCHES OF UNTREATED BASE COURSE MATERIAL

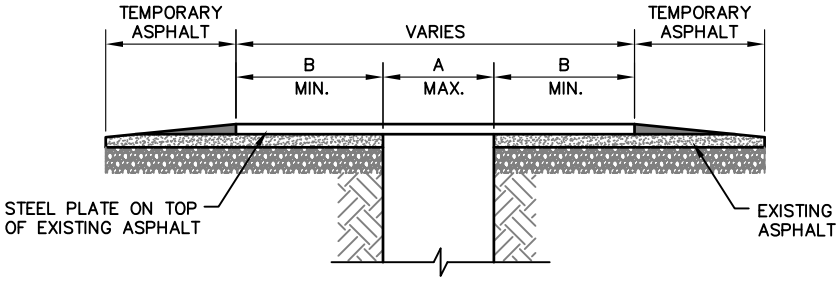

TYPE 1

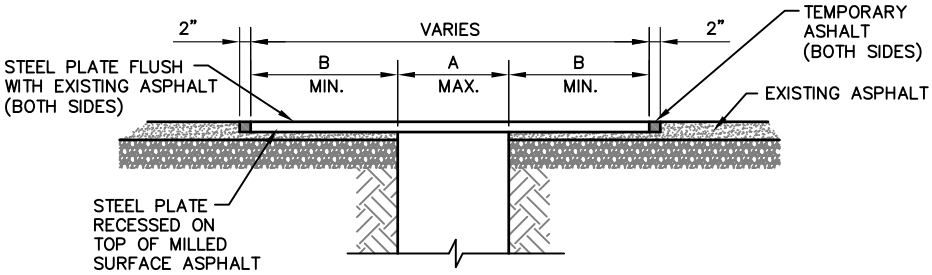

TYPE 2

NOTES:

1. USE TYPE 1 OR TYPE 2 DETERMINED BY CITY INSPECTOR(S).
2. FOR TYPE 2 PLATE INSTALLATION, THE STEEL PLATE SHALL BE RECESSED BY MILLING INTO THE EXISTING ASPHALT TO SET FLUSH WITH THE SURFACE OF THE EXISTING ASPHALT. FULL DEPTH CUTTING OF PAVEMENT SECTION OUTSIDE OF TRENCH IS NOT PERMITTED. MILLING DEPTH SHALL MATCH THICKNESS OF PLATE. THE GAP BETWEEN THE EDGE OF THE PLATE AND THE ADJACENT EXISTING ASPHALT PAVEMENT MUST BE FILLED WITH TEMPORARY ASPHALT.
3. TRENCH WIDTHS ARE BASED ON AN ANALYSIS PER THE 14TH EDITION OF STANDARD SPECIFICATIONS FOR HIGHWAY BRIDGES BY AASHTO. AN ASSUMED AXLE LOADING OF 12 TONS WITH A 30% IMPACT FACTOR WAS USED. THE AXLE LENGTH IS 6 FEET. THEREFORE THE NUMBER OF WHEELS CARRIED BY A PLATE DEPENDS ON THE ROADWAY WIDTH.
4. STEEL PLATE MUST BE ABLE TO WITHSTAND H-20 TRAFFIC LOADINGS WITHOUT ANY MOVEMENTS.
5. PLATES SHALL BE FABRICATED FROM ASTM A36 STEEL (MIN.)
6. PLATES SHALL BE SECURED FROM LATERAL MOVEMENT AND VERTICAL VIBRATION (ASSOCIATED NOISE) WHILE IN USE BY TEMPORARY ASPHALT (COLD MIX.)
7. APPROPRIATE SIGNAGE REQUIRED

WEST JORDAN UTAH

STANDARD TRENCH PLATING DETAIL

PLAN

RD195

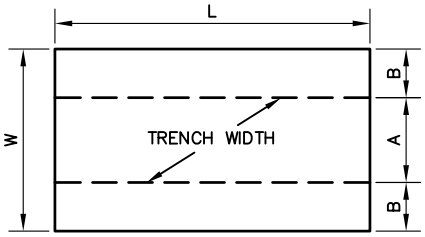

LONGITUDINAL
STEEL PLATE

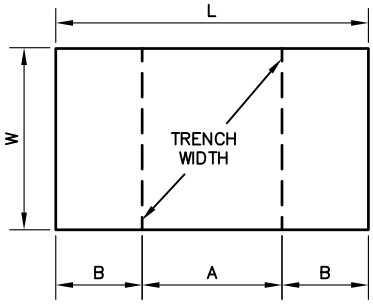

TRANSVERSE
STEEL PLATE

		PLATE SIZE				
LONGITUDINAL					TRANSVERSE	
(A)	(B)	THICKNESS	(W)	(L)	(A)	(B)
12"	18"	1"	4'	8'	58"	19"
12"	18"	1"	4'	10'	58"	31"
24"	18"	1"	5'	10'	70"	25"
36"	18"	1"	6'	10'	44"	38"
48"	18"	1"	7'	10'	52"	34"
60"	18"	1"	8'	10'	58"	31"
12"	18"	1-1/4"	4'	15'	88"	47"
24"	18"	1-1/4"	5'	12'	104"	20"
36"	18"	1-1/4"	6'	12'	66"	39"
36"	18"	1-1/4"	6'	16'	66"	63"
48"	18"	1-1/4"	7'	12'	76"	33"
48"	18"	1-1/4"	7'	16'	76"	58"
60"	18"	1-1/4"	8'	12'	86"	29"
60"	18"	1-1/4"	8'	15'	86"	47"
60"	18"	1-1/4"	8'	16'	86"	63"
60"	18"	1-1/4"	8'	20'	86"	77"
60"	18"	1-3/8"	8'	20'	102"	69"

WEST JORDAN UTAH

STANDARD TRENCH PLATING DETAIL

PLAN
RD195

NOTES:

1. UNTREATED BASE COURSE: USE CLASS A UNTREATED BASE COARSE GRADE 1 OR GRADE 3/4 PER APWA SECTION 32 11 23. USE OF SEWER ROCK OR RECYCLED AGGREGATE REQUIRES ENGINEER'S WRITTEN APPROVAL.

   A. PLACE BACKFILL MATERIAL PER APWA SECTION 32 05 10.
   B. COMPACT BACKFILL MATERIAL PER APWA SECTION 31 23 26 TO A MODIFIED PROCTOR DENSITY OF 95 PERCENT OR GREATER.

2. CONCRETE: CLASS 4000 PER APWA SECTION 03 30 04.

   A. IF NECESSARY, PROVIDE CONCRETE WHICH ACHIEVES DESIGN STRENGTH IN 72 HOURS (3 DAYS). USE CAUTION, HOWEVER, AS SPIDER CRACKS DEVELOP IF AIR TEMPERATURE EXCEEDS 90 DEGREES F.
   B. PLACE CONCRETE PER APWA SECTION 03 30 10.
   C. PROVIDE 1/2 INCH RADIUS ON ALL EXPOSED CONCRETE EDGES UNLESS OTHERWISE SHOWN.
   D. APPLY A SEALING/CURING COMPOUND PER APWA SECTION 03 39 00. (TYPE ID CLASS A; CLEAN WITH FUGITIVE DYE)
   E. PROTECT CONCRETE FROM PREMATURE DRYING, HOT OR COLD TEMPERATURES, GRAFFITI, AND MECHANICAL INJURY.
   F. REPLACE CONCRETE DAMAGED BY MECHANICAL INJURY, OR THAT DOES NOT CONFORM TO REQUIRED LEVELS, LINES, DETAILS AND ELEVATIONS.

3. EXPANSION JOINTS:

   A. PROVIDE FULL DEPTH 1/2 INCH THICK F1 JOINT FILLER MATERIAL PER APWA SECTION 32 13 73. SET TOP OF FILLER FLUSH WITH SURFACE OF CONCRETE. PLACE EXPANSION JOINTS EVERY 50 FEET.
   B. EXPANSION JOINTS ARE NOT REQUIRED IN SLIP FORM WORK EXCEPT AT THE START OR END OF THE WORK DAY, AND AT THE START OR END OF A STREET INTERSECTION CURB RADIUS RETURN.

4. CONTRACTION JOINTS: MAKE CONTRACTION JOINTS VERTICAL, AT LEAST 1/8" WIDE, AND 2 INCHES DEEP OR 1/4 SLAB THICKNESS IF THE SLAB IS GREATER THAN 8 INCHES THICK. PLACE CONTRACTION JOINTS EVERY 10 FEET.

5. FINISH: FINE HAIR BROOM ON LONGITUDINAL GRADES LESS THAN 6 PERCENT. ROUGH GRADE BROOM ON LONGITUDINAL GRADES GREATER THAN 6 PERCENT.

6. WIDTH OF SIDEWALK: 5 FOOT MINIMUM WIDTH ON RESIDENTIAL AND COLLECTOR ROADWAYS. 6 FOOT MINIMUM WIDTH ON ARTERIAL STREET AND WHEN ADJACENT TO CURB.

7. REBAR: CONTRACTOR TO USE 3/4 INCH COATED DEFORMED DOWELS ON 5 FEET MAXIMUM CENTERS WHEN SIDEWALK IS ADJACENT TO CURB AND GUTTER.

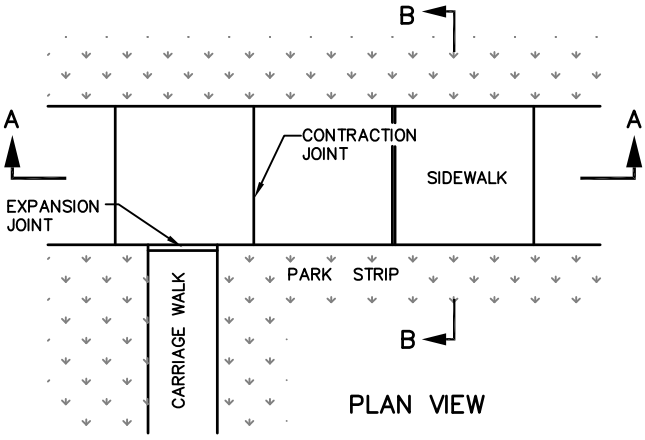

PLAN VIEW

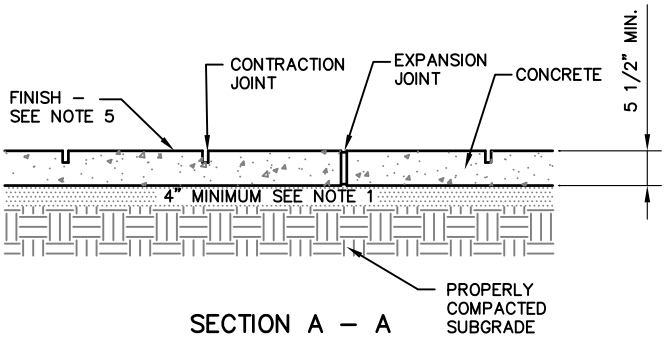

SECTION A – A

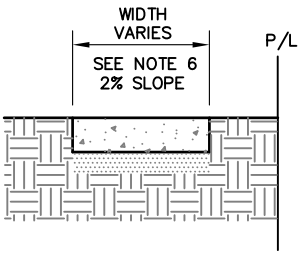

SECTION B – B

DRAWING UPDATED JUNE, 2019

City of West Jordan, Utah

WEST JORDAN UTAH

STANDARD SIDEWALK

PLAN

RD200

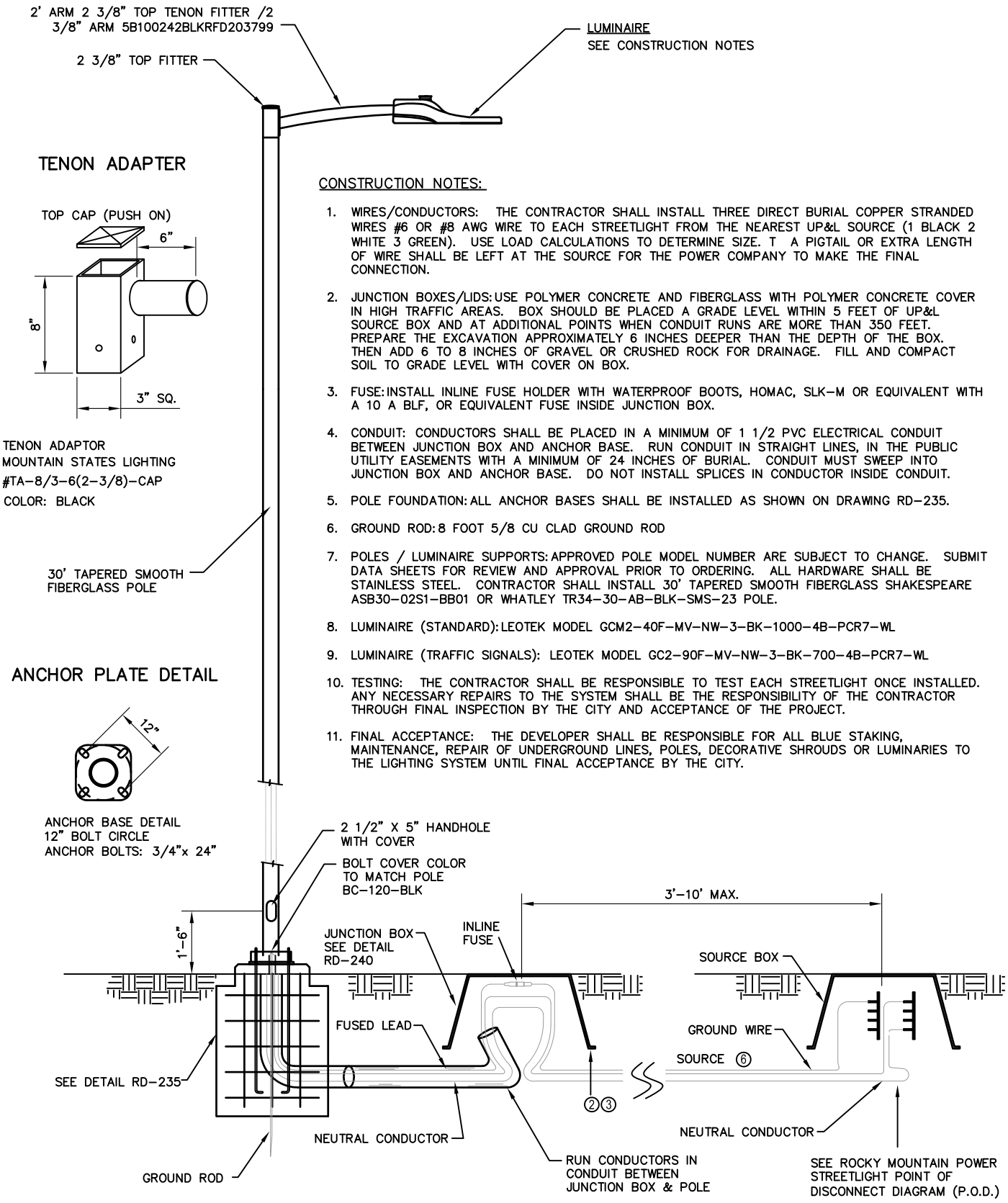

CONSTRUCTION NOTES:

1. WIRES/CONDUCTORS: THE CONTRACTOR SHALL INSTALL THREE DIRECT BURIAL COPPER STRANDED WIRES #6 OR #8 AWG WIRE TO EACH STREETLIGHT FROM THE NEAREST UP&L SOURCE (1 BLACK 2 WHITE 3 GREEN). USE LOAD CALCULATIONS TO DETERMINE SIZE. T A PIGTAIL OR EXTRA LENGTH OF WIRE SHALL BE LEFT AT THE SOURCE FOR THE POWER COMPANY TO MAKE THE FINAL CONNECTION.
2. JUNCTION BOXES/LIDS: USE POLYMER CONCRETE AND FIBERGLASS WITH POLYMER CONCRETE COVER IN HIGH TRAFFIC AREAS. BOX SHOULD BE PLACED A GRADE LEVEL WITHIN 5 FEET OF UP&L SOURCE BOX AND AT ADDITIONAL POINTS WHEN CONDUIT RUNS ARE MORE THAN 350 FEET. PREPARE THE EXCAVATION APPROXIMATELY 6 INCHES DEEPER THAN THE DEPTH OF THE BOX. THEN ADD 6 TO 8 INCHES OF GRAVEL OR CRUSHED ROCK FOR DRAINAGE. FILL AND COMPACT SOIL TO GRADE LEVEL WITH COVER ON BOX.
3. FUSE: INSTALL INLINE FUSE HOLDER WITH WATERPROOF BOOTS, HOMAC, SLK-M OR EQUIVALENT WITH A 10 A BLF, OR EQUIVALENT FUSE INSIDE JUNCTION BOX.
4. CONDUIT: CONDUCTORS SHALL BE PLACED IN A MINIMUM OF 1 1/2 PVC ELECTRICAL CONDUIT BETWEEN JUNCTION BOX AND ANCHOR BASE. RUN CONDUIT IN STRAIGHT LINES, IN THE PUBLIC UTILITY EASEMENTS WITH A MINIMUM OF 24 INCHES OF BURIAL. CONDUIT MUST SWEEP INTO JUNCTION BOX AND ANCHOR BASE. DO NOT INSTALL SPLICES IN CONDUCTOR INSIDE CONDUIT.
5. POLE FOUNDATION: ALL ANCHOR BASES SHALL BE INSTALLED AS SHOWN ON DRAWING RD-235.
6. GROUND ROD: 8 FOOT 5/8 CU CLAD GROUND ROD
7. POLES / LUMINAIRE SUPPORTS: APPROVED POLE MODEL NUMBER ARE SUBJECT TO CHANGE. SUBMIT DATA SHEETS FOR REVIEW AND APPROVAL PRIOR TO ORDERING. ALL HARDWARE SHALL BE STAINLESS STEEL. CONTRACTOR SHALL INSTALL 30' TAPERED SMOOTH FIBERGLASS SHAKESPEARE ASB30-02S1-BB01 OR WHATLEY TR34-30-AB-BLK-SMS-23 POLE.
8. LUMINAIRE (STANDARD): LEOTEK MODEL GCM2-40F-MV-NW-3-BK-1000-4B-PCR7-WL
9. LUMINAIRE (TRAFFIC SIGNALS): LEOTEK MODEL GC2-90F-MV-NW-3-BK-700-4B-PCR7-WL
10. TESTING: THE CONTRACTOR SHALL BE RESPONSIBLE TO TEST EACH STREETLIGHT ONCE INSTALLED. ANY NECESSARY REPAIRS TO THE SYSTEM SHALL BE THE RESPONSIBILITY OF THE CONTRACTOR THROUGH FINAL INSPECTION BY THE CITY AND ACCEPTANCE OF THE PROJECT.
11. FINAL ACCEPTANCE: THE DEVELOPER SHALL BE RESPONSIBLE FOR ALL BLUE STAKING, MAINTENANCE, REPAIR OF UNDERGROUND LINES, POLES, DECORATIVE SHROUDS OR LUMINARIES TO THE LIGHTING SYSTEM UNTIL FINAL ACCEPTANCE BY THE CITY.

DRAWING UPDATED JUNE, 2019

City of West Jordan, Utah

WEST JORDAN UTAH

COLLECTOR AND ARTERIAL STREET LIGHT

PLAN

RD215

RESIDENTIAL STREET LIGHT (W/ OPTIONAL CONCRETS BASE)

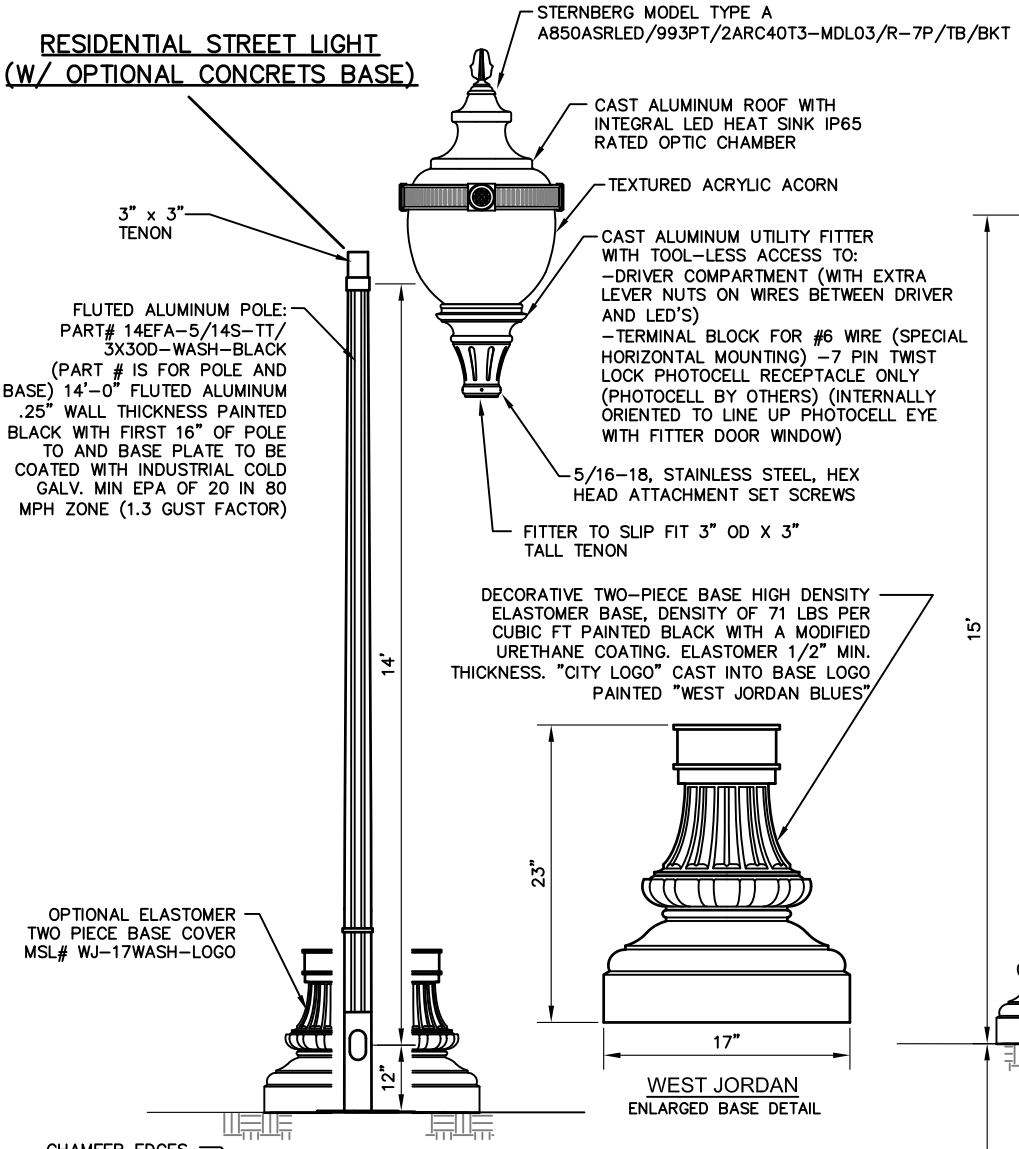

RESIDENTIAL STREET LIGHT (NO CONCRETE BASE)

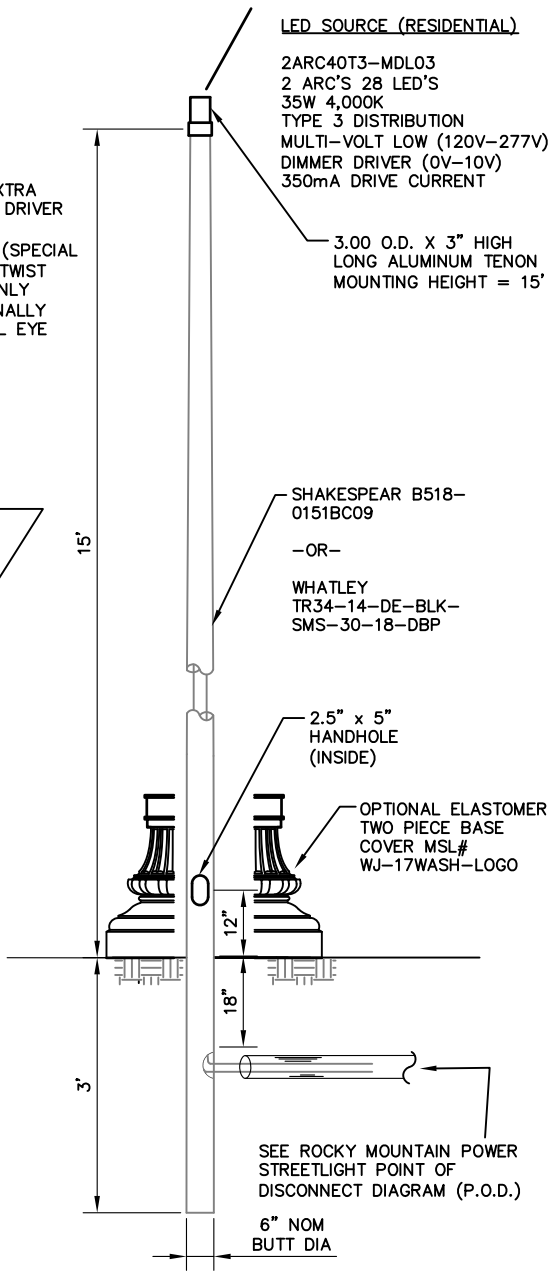

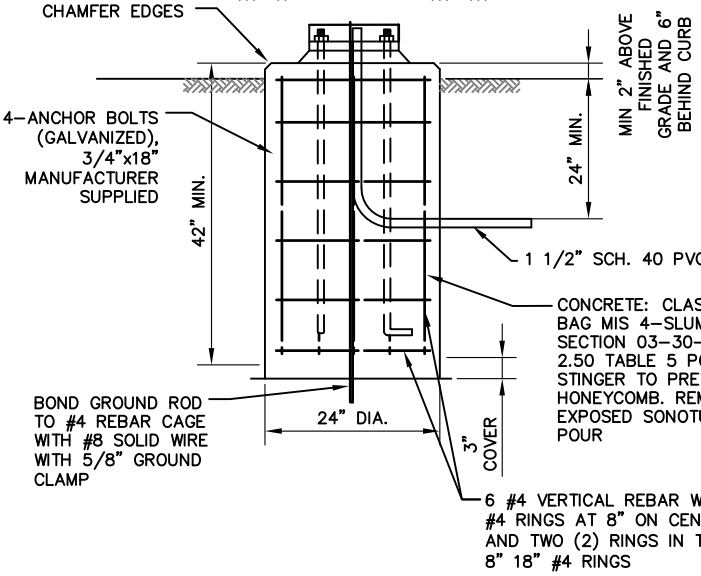

ANCHOR PLATE DETAIL

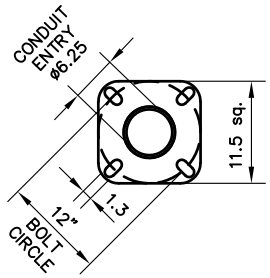

DRAWING UPDATED JUNE, 2019

City of West Jordan, Utah

WEST JORDAN UTAH

RESIDENTIAL STREET LIGHT

PLAN

RD225

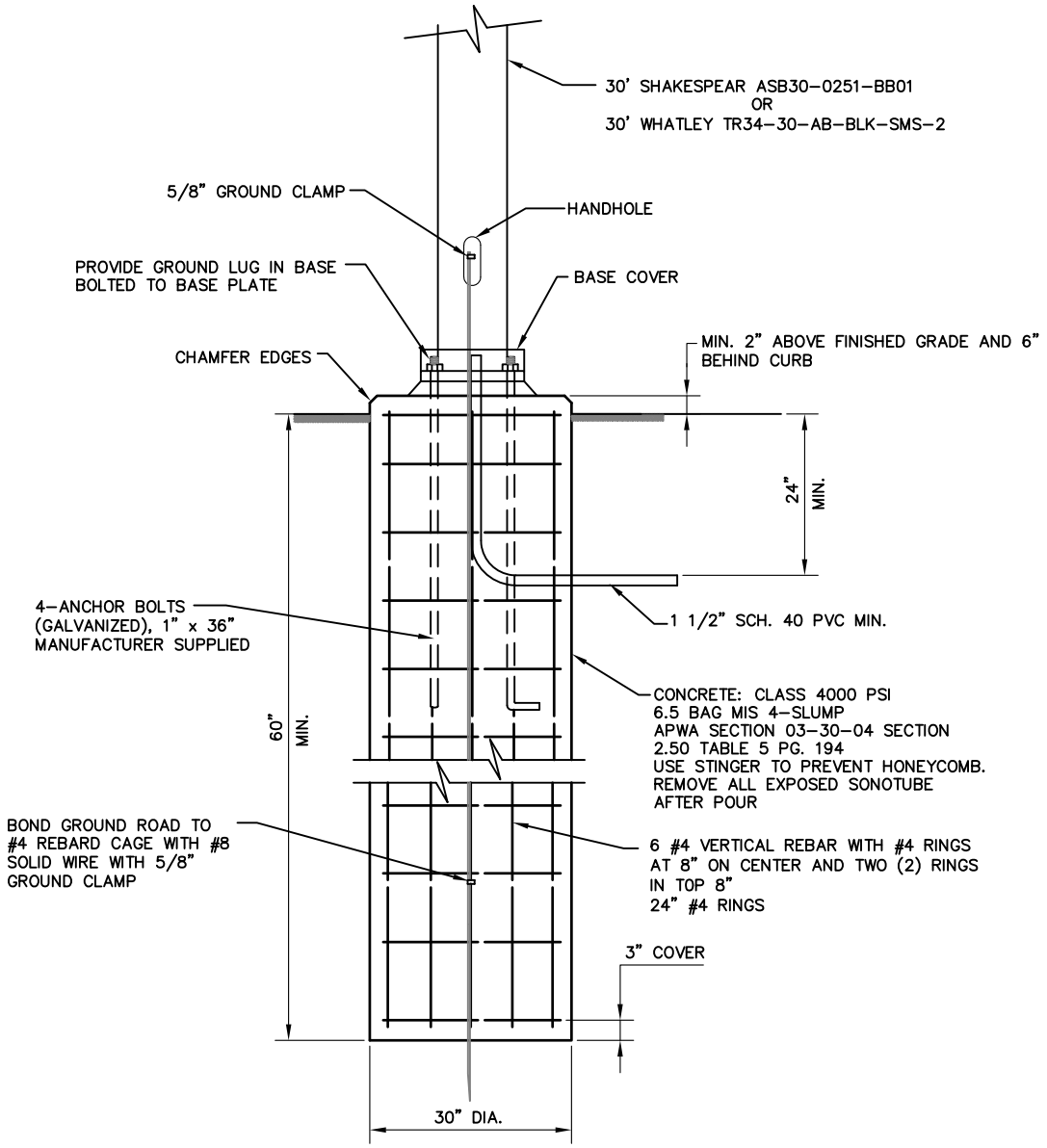

POLE FOUNDATION

DRAWING UPDATED JUNE, 2019

City of West Jordan, Utah

WEST JORDAN UTAH

ARTERIAL/COLLECTOR POLE FOUNDATION

PLAN

RD235

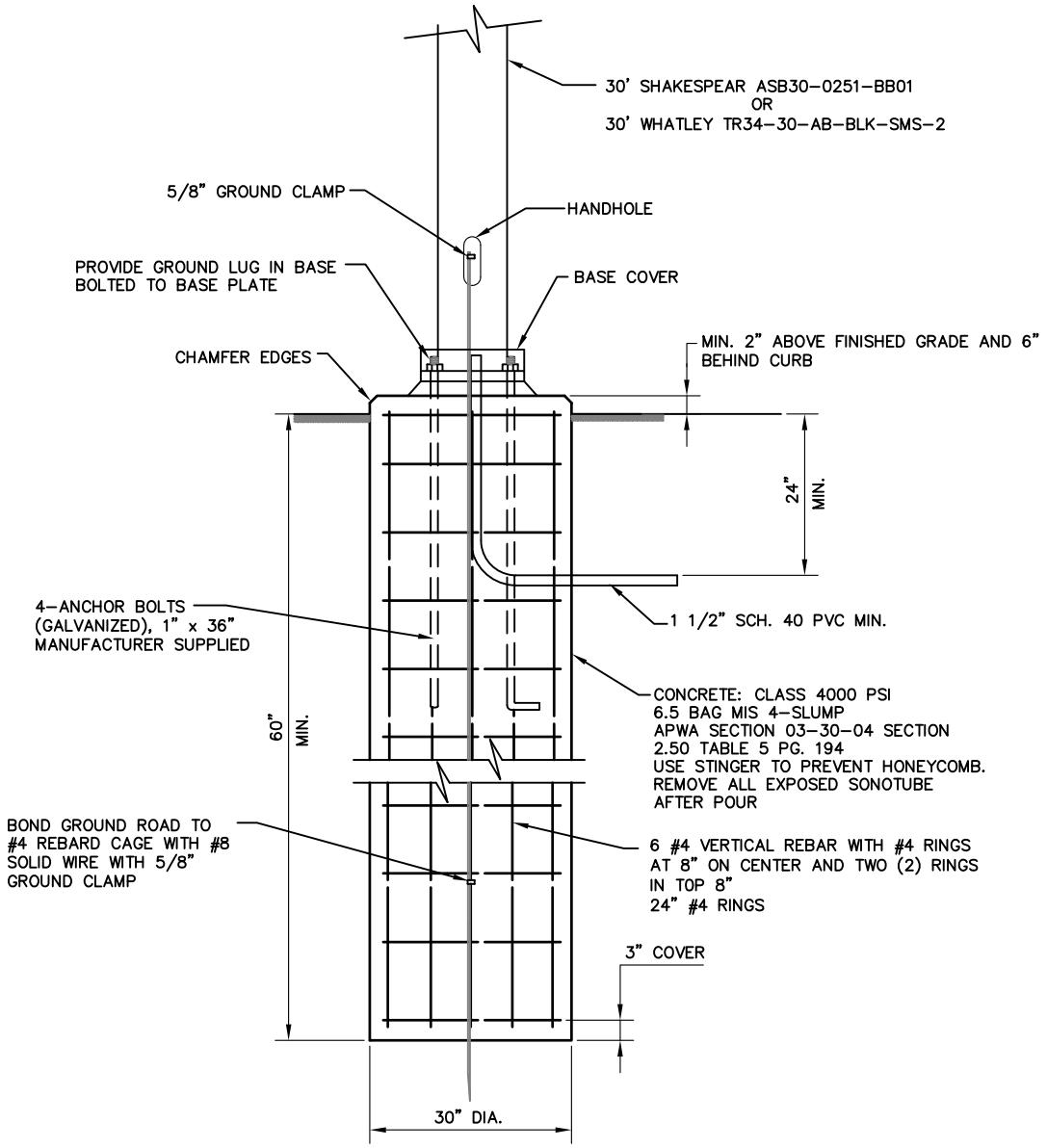

POLE FOUNDATION

DRAWING UPDATED JUNE, 2019

City of West Jordan, Utah

WEST JORDAN UTAH

ARTERIAL/COLLECTOR POLE FOUNDATION

PLAN

RD235

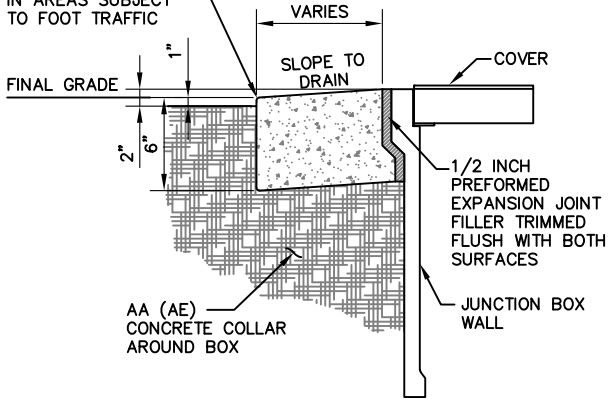

JUNCTION BOX CONCRETE COLLAR DETAIL

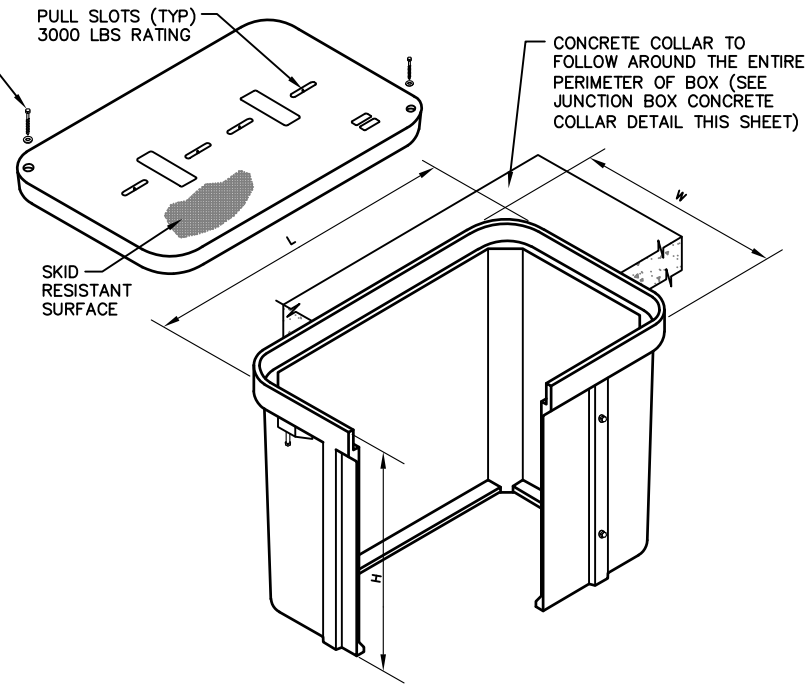

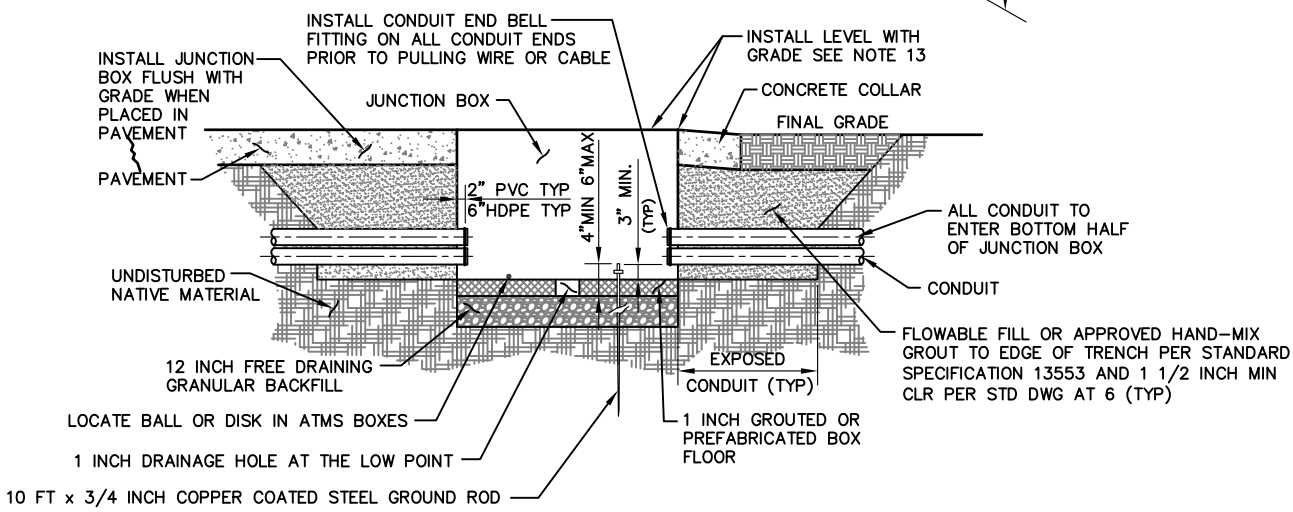

JUNCTION BOX CONDUIT PENETRATION DETAIL

BOX TYPE	"W" INCH	"L" INCH	"H" INCH	"X" INCH	"Y" INCH	LOADING
I-PC	13	24	24	10	10	TIER 22
II-PC	24	36	36	10	24	TIER 22
III-PC	30	48	36	10	24	TIER 22

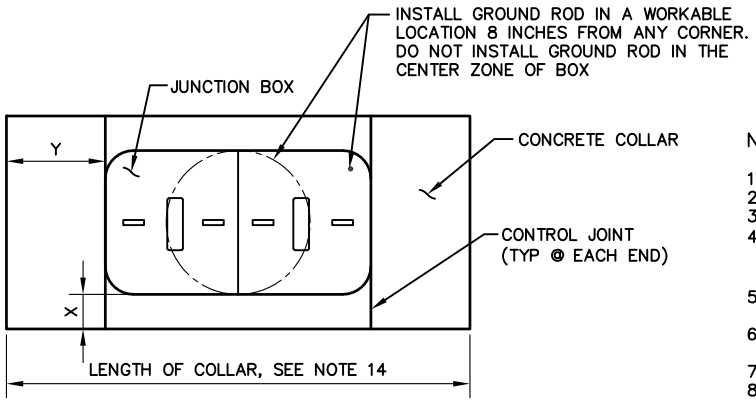

PLAN VIEW JUNCTION BOX AND CONCRETE COLLAR

NOTE:

1. PLACE JUNCTION BOXES IN PARKSTRIP
2. PROVIDE CONCRETE COLLARS.
3. PROVIDE TYPE III-PC JUNCTION BOX WITH A SPLIT LID.
4. CONFORM TO ANSI/SCTE-77 "SPECIFICATION FOR UNDERGROUND ENCLOSURE INTEGRITY" TIER 22 LOADING FOR ALL JUNCTION BOXES TIER 22 ID PLATE TO BE VISIBLE ON BOX.
5. EXTEND GROUND ROD A MINIMUM OF 4 INCHES AND MAXIMUM OF 6" ABOVE BOTTOM OF JUNCTION BOX.
6. USE INTER SYSTEM GROUNDING BRIDGE CLAMP FOR BONDING TO GROUND ROD. ATTACH NOT MORE THAN 4 WIRES PER CLAMP.
7. DO NOT CUT GROUND RODS.
8. PROVIDE CLEAR SPACE OF AT LEAST 36 INCH FOR PERSONNEL TO PULL LID OFF BOX WITHOUT CONFLICT.
9. PLACE JUNCTIONS BOXES AND CONCRETE COLLARS LEVEL WITH GRADE

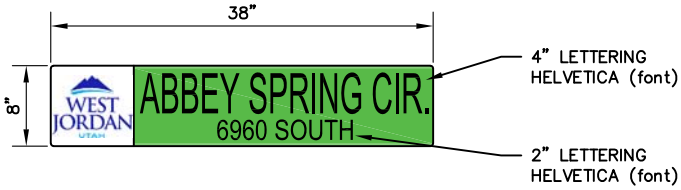

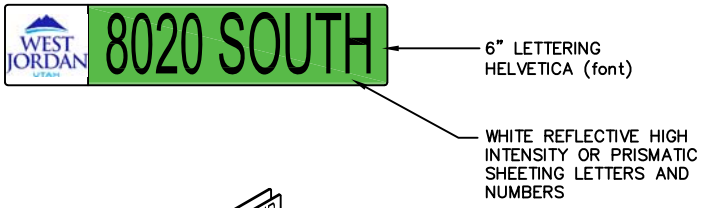

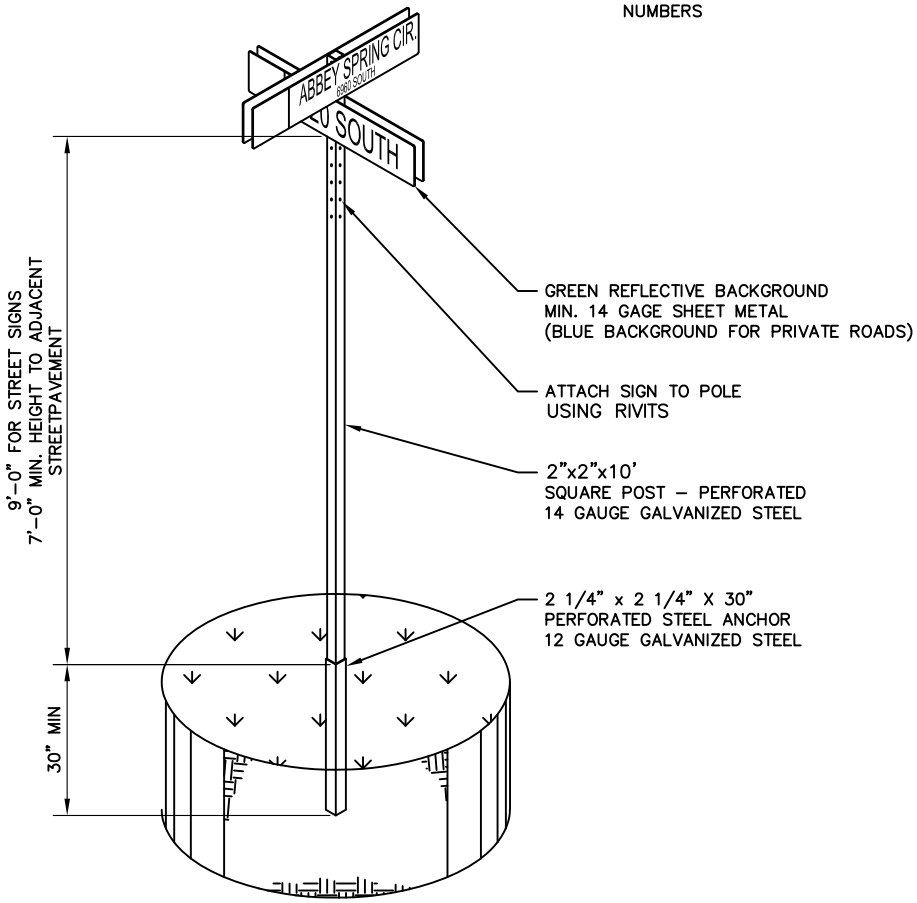

NO STOP SIGNS ALLOWED ON STREET SIGN

DRAWING UPDATED JUNE, 2019

City of West Jordan, Utah

WEST JORDAN UTAH

STREET SIGN

PLAN

RD250

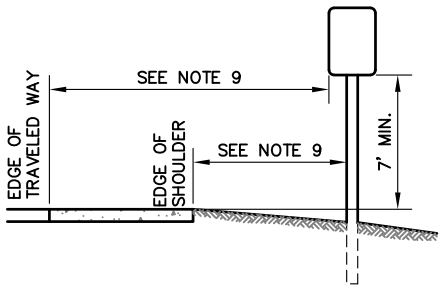

W/O SUPPLEMENTAL SIGN

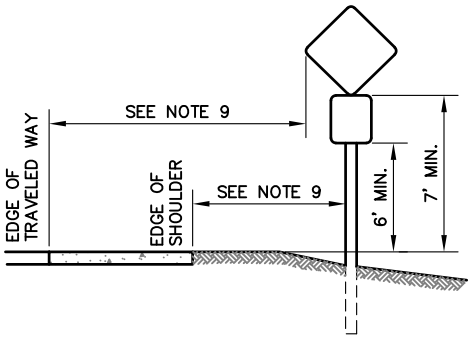

W/ SUPPLEMENTAL SIGN

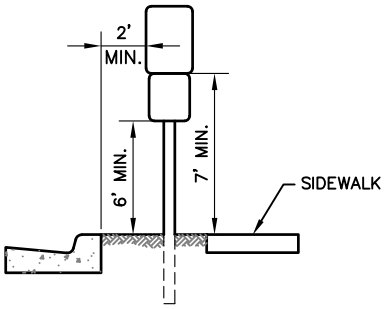

W/ CURB & GUTTER
SEE NOTE 5 & 7

SINGLE SUPPORT SIGNS

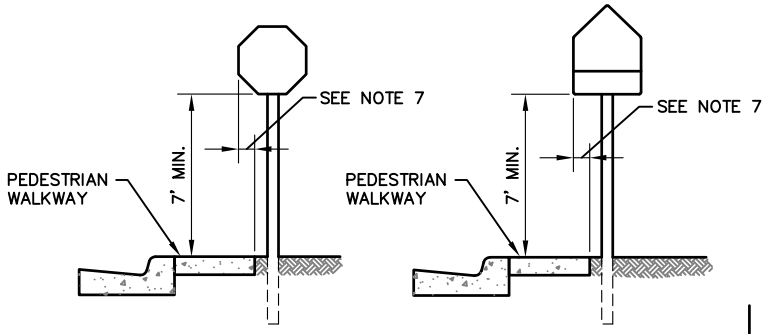

OVER PEDESTRIAN WALKWAY
OR BICYCLE MOVEMENT
SEE NOTE 5 & 7

SINGLE SUPPORT SIGNS

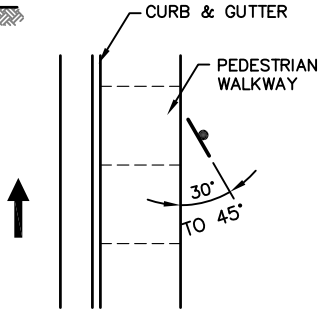

BEHIND ADJACENT
PEDESTRIAN WALKWAY

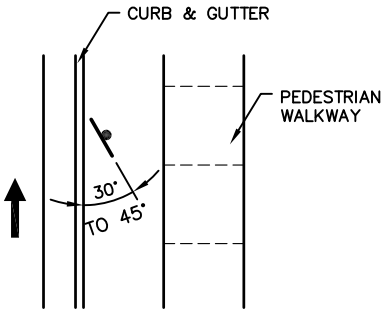

BEHIND
CURB & GUTTER

PARKING SIGNS
SEE NOTE 6

NOTE:

1. MINIMUM MOUNTING HEIGHT FOR SIGNS IS THE BOTTOM OF THE PRIMARY SIGN WHEN THERE IS NOT A SUPPLEMENTAL SIGN OR THE BOTTOM OF THE SUPPLEMENTAL SIGN WHEN USED.
2. PLACE SIGN BEHIND PEDESTRIAN WALKWAY AT 7 FT. MIN. HEIGHT WHEN SIDEWALK IS ADJACENT TO THE CURB & GUTTER.
3. MINIMUM SIGN HEIGHT MAY BE REDUCED ON CONVENTIONAL ROADS IN RURAL AREA TO 6 FT. MIN. EXCEPT IN LOCATIONS OVER PEDESTRIAN OR BICYCLE MOVEMENTS.
4. SIGN MINIMUM MOUNTING HEIGHT IS SHOWN, MAXIMUM MOUNTING HEIGHT IS 1 FT. ABOVE MIN. MOUNTING HEIGHT.
5. MAINTAIN ADA REQUIREMENTS WHEN INSTALLING SIGN WITHIN SIDEWALK.
6. PLACE PARKING REGULATION SIGNS AT ANGLE NOT LESS THAN 30 DEGREES NOR MORE THAN 45 DEGREES WITH THE LINE OF TRAFFIC FLOW IN ORDER TO BE VISIBLE TO APPROACHING TRAFFIC.
7. PROVIDE A 7 FT. MIN. MOUNTING HEIGHT FOR ALL SIGNS AND PLAQUES WHEN SIGN ENCROACHES 4 INCH OR MORE LATERALLY ABOVE A PEDESTRIAN WALKWAY.
8. INSTALL SIGNS 15 FT. FROM TRAVELED WAY OR 6 FT. FROM THE EDGE OF SHOULDER, WHICHEVER IS GREATER.

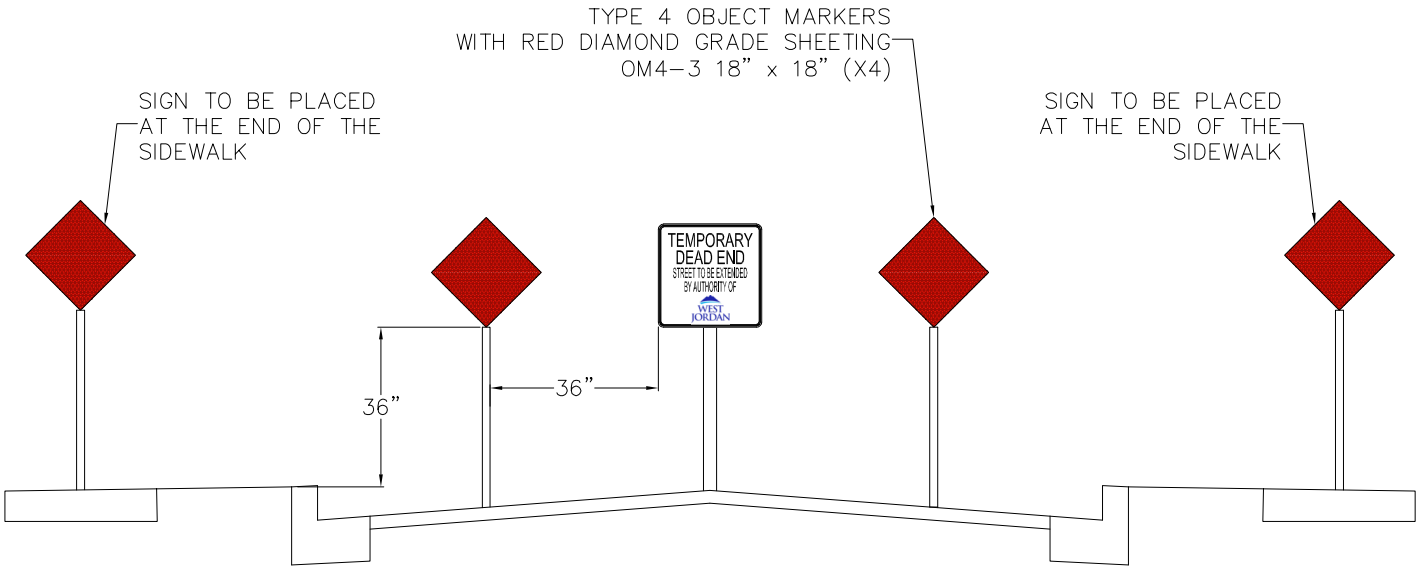

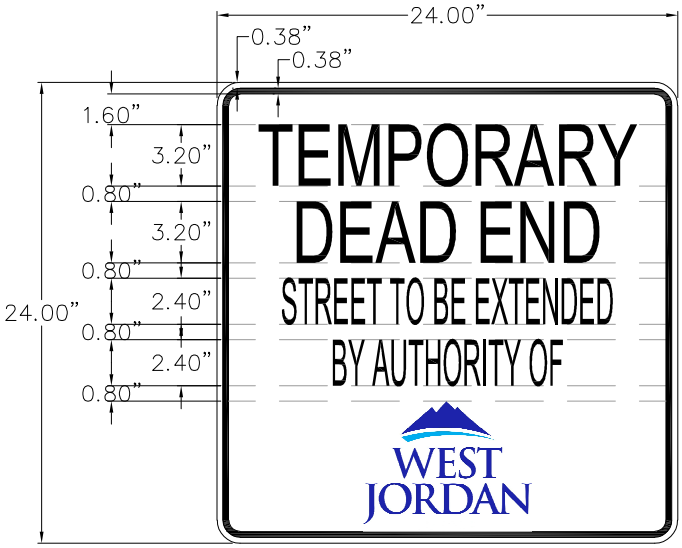

LETTERING AND EDGES:	BLACK
FONT TYPE:	HIGHLAND GOTHIC ON CENTER
BACKGROUND:	WHITE

UPDATED OCTOBER 2019

WEST JORDAN UTAH

TEMPORARY END OF ROAD SIGN DETAIL

PLAN

RD-256

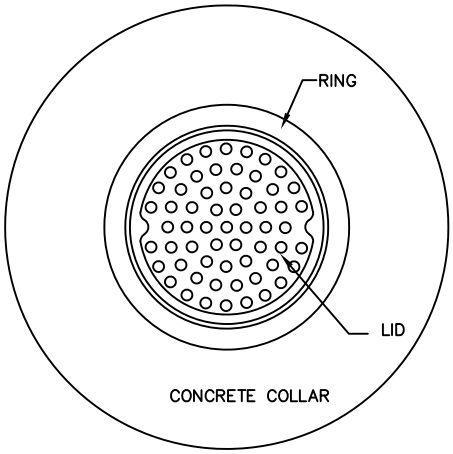

PLAN VIEW

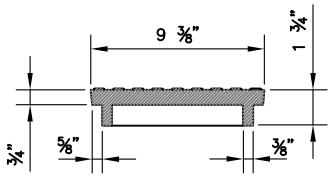

LID

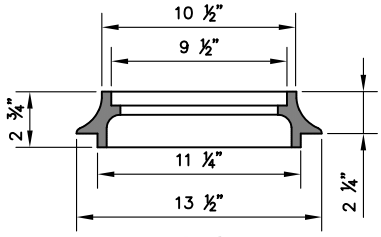

RING

RING AND LID

CAST IRON TO CONFORM TO ASTM A-48. CLASS 35B
H-20 WHEEL LOADING
EST. WEIGHT: 43 LBS.

BRASS

ITEM #9 BRASS MONUMENT POST (DOME TOP)
NOTE: LETTERING AS REQUIRED
TEXT SIZE 5/16"

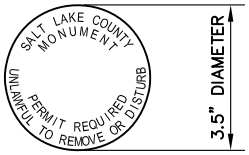

CAP PLAN

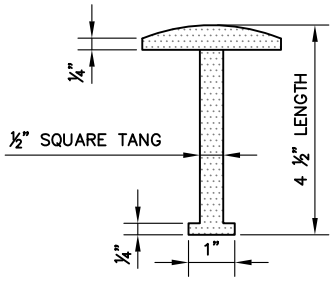

CAP SECTION

NOTE:
POUR IN PLACE MONUMENTS MAY BE ALLOWED ON A CASE BY CASE BASIS. SUBJECT TO PRIOR APPROVAL BY THE SALT LAKE COUNTY SURVEYOR.

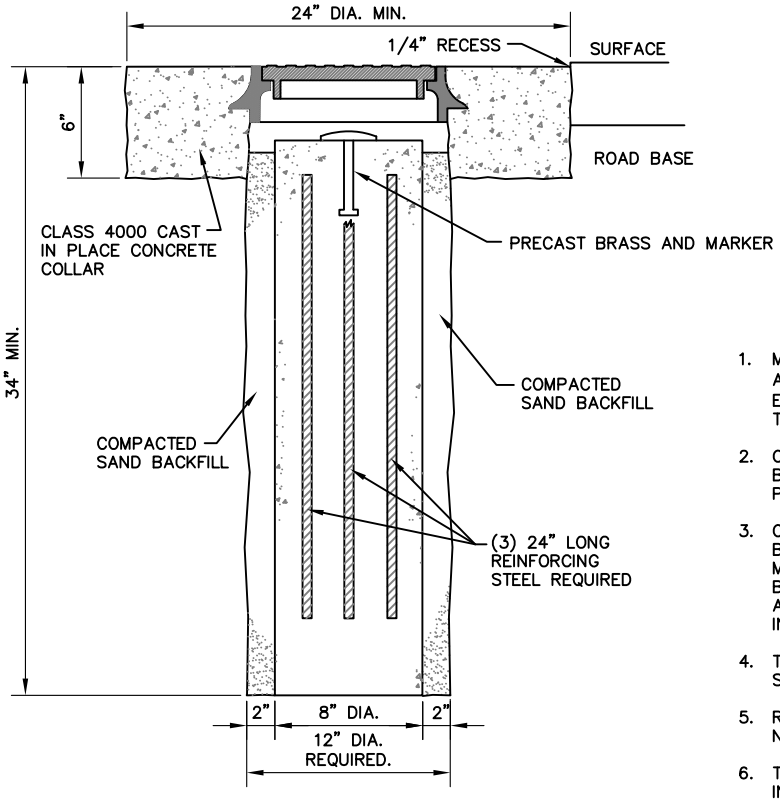

PRECAST MONUMENT AND BRASS SUPPLIED BY COUNTY SURVEYOR

COUNTY STREET MONUMENT SECTION

1. MATERIALS, CONSTRUCTION AND WORKMANSHIP SHALL BE IN ACCORDANCE WITH APWA MANUAL OF STANDARD SPECIFICATIONS (2017 EDITION), AND SUPPLEMENTS THERETO WHICH ARE IN EFFECT AT THE DATE OF THIS REQUEST.
2. COUNTY MONUMENT COVER, FRAME AND PRECAST BRASS AND MARKER BASE SHALL BE FURNISHED THE COUNTY AS PROVIDED IN THE PERMITTING PROCESS
3. COVER, FRAME, RISER AND PRE CAST BRASS AND MARKER BASE CAN BE OBTAINED AT PUBLIC WORKS OPERATION 7125 SOUTH 600 WEST, MIDVALE UTAH 84047. THE DEVELOPER, CONTRACTOR, OR AGENT SHALL BE RESPONSIBLE FOR THE TRANSPORTATION OF THE ALL MONUMENTS AND INCIDENTAL ITEMS REQUIRED TO COMPLETE THE MONUMENT INSTALLATION,
4. THE COUNTY SURVEYOR SHALL CHECK MONUMENT POINT AND STRADDLES BEFORE MONUMENTS CAN BE INSTALLED.
5. REINFORCING STEEL USED IN COUNTY SURVEY MONUMENTS SHALL BE NO. 4 BARS.
6. THE COUNTY SURVEYOR SHALL CROSS BRASS MAKER AFTER INSTALLATION OF SURVEY MONUMENT.
7. CONTRACTOR SHALL ALLOW THE COUNTY SURVEYOR AN OPPORTUNITY TO SALVAGE ALL EXISTING MONUMENTS, SPECIFICALLY, RINGS RISERS, LIDS AND BRASS MAKERS.
8. FIELD INSPECTION BY GOVERNING ENTITY REQUIRED PRIOR TO INSTALLATION OF MONUMENT.
9. THE NON-USE OF ANY MATERIALS RECEIVED FROM SALT LAKE COUNTY SHALL NOT CONSTITUTE A CLAIM OF CREDIT.
10. DEVELOPER/AGENT SHALL PROVIDE COPIES OF APPROVED AND RECORDED SUBDIVISION PLATS, STREET DEDICATIONS, OR AFFIDAVIT OF CORRECTIONS SHOWING COORDINATES OF NEW MONUMENTS AND THEIR RELATIONSHIP TO MONUMENT CONTROL.

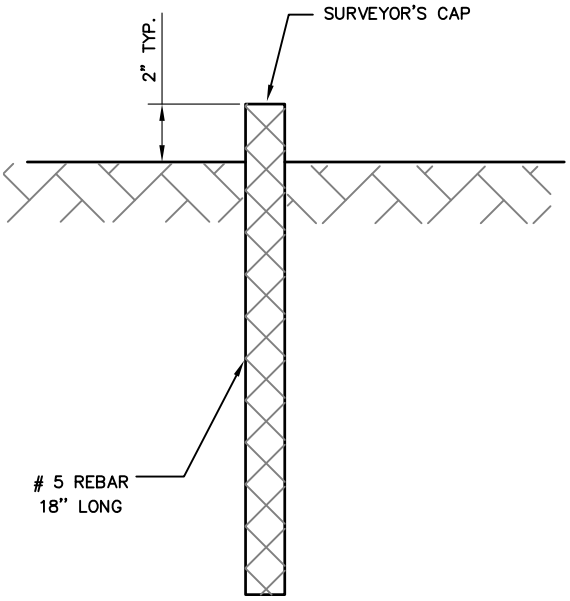

TYPE A

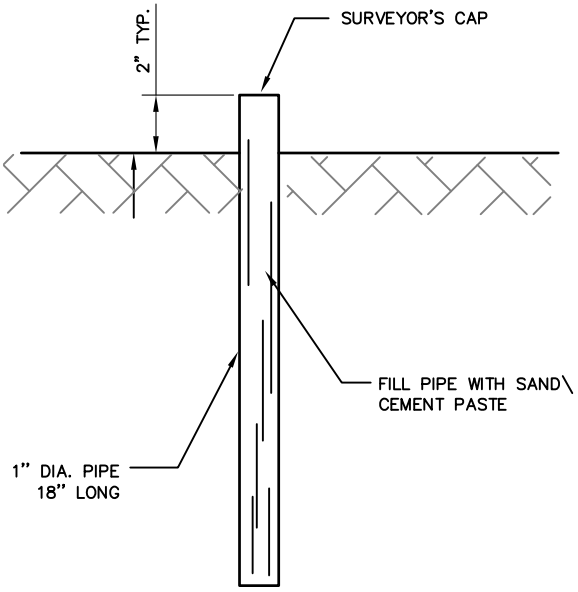

TYPE B

CORNER MARKERS

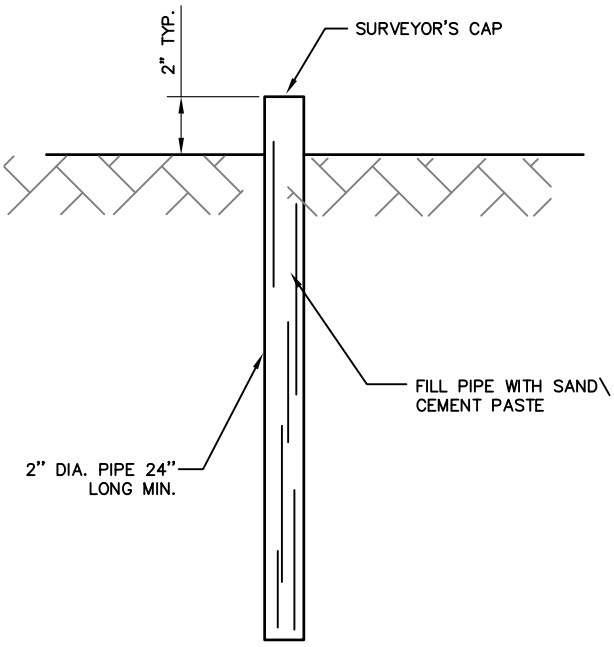

TYPE C

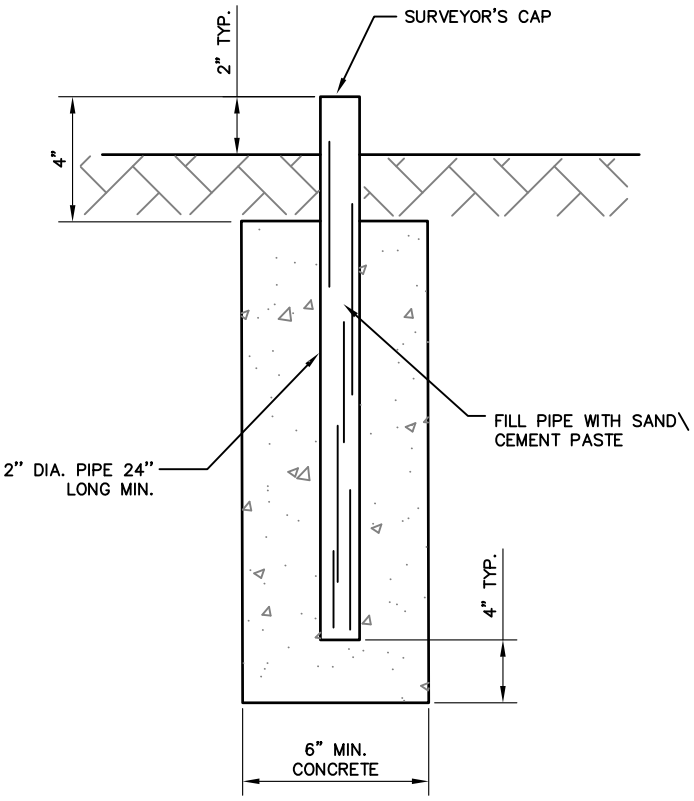

BOUNDARY MARKERS

TYPE D

DRAWING UPDATED JUNE, 2019

City of West Jordan, Utah

WEST JORDAN UTAH

SURVEY MONUMENTATION CORNER AND BOUNDARY MARKERS

PLAN

RD265

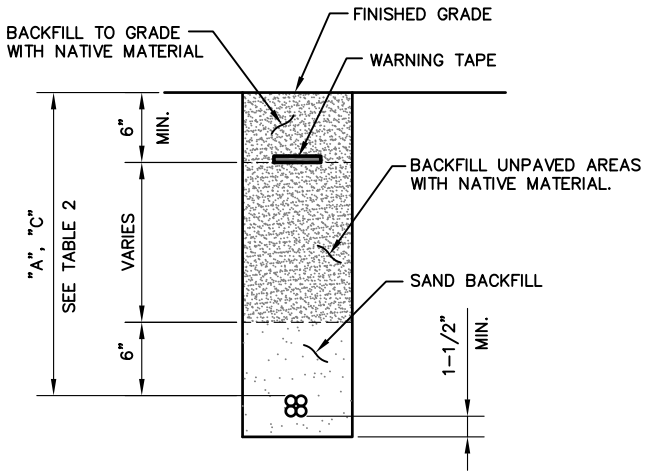

1-D MULTIDUCT CONDUIT

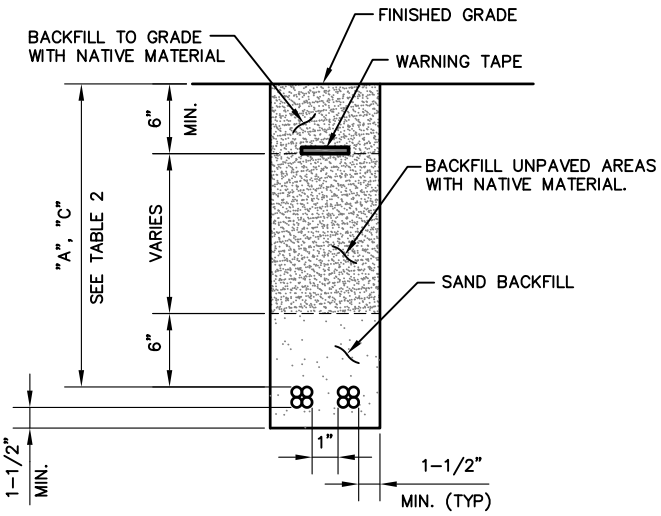

2-D MULTIDUCT CONDUIT

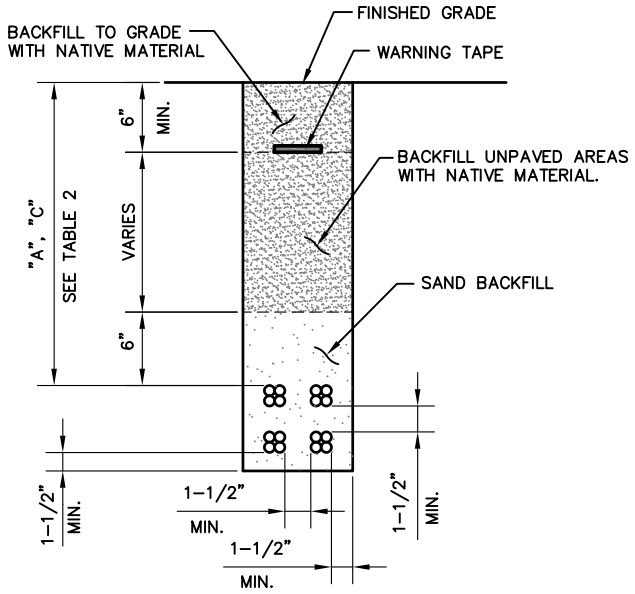

4-D MULTIDUCT CONDUIT

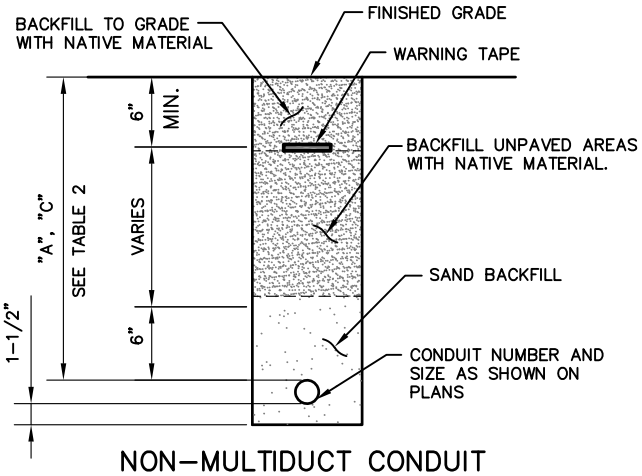

NON-MULTIDUCT CONDUIT
AND BUNDLED MICRODUCT

EXISTING ASPHALT PAVEMENT THICKNESS (T1) IN INCHES	RESTORATION T-PATCH THICKNESS IN INCHES
0-3 1/2"	3 1/2"
3 1/2"-7"	MATCH EXISTING DEPTH
7" OR GREATER	7"

	DEPTH IN INCHES	AREA
A	36	OUTSIDE 20' OF PAVEMENT EDGE
B	48	HIGHWAY ROW UNDER ASPHALT PAVEMENT SURFACE
C	60	WITHIN 20' OF PAVEMENT EDGE

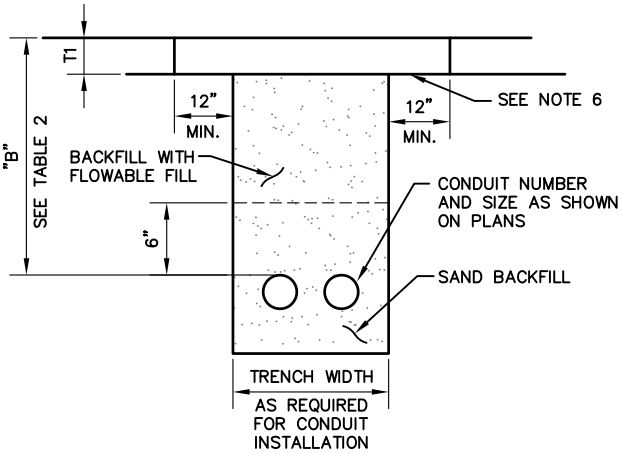

CONDUIT TRENCHED IN ASPHALT
PAVEMENT RESTORED WITH T PATCH

NOTES:

1. SAW CUT PAVEMENT EDGES APPLY A HOT POUR RUBBERIZED ASPHALT JOINT SEALANT OR APPROVED EQUAL. APPLIED AFTER PATCH IS INSTALLED.
2. USE HMA MATERIAL FOR T-PATCH USE OPEN-GRADED SURFACE COURSE FOR THE TOP 1" OF HMA FOR PATCHES GREATER THAN 12' WIDE WHERE OPEN-GRADED SURFACE COURSE EXISTS. MATCH EXISTING PAVEMENT AND CROSS-SECTION.
3. USE SAND BACKFILL AND FLOWABLE FILL WITHIN EXISTING ROADWAY, PROPOSED ROADWAY, AND SIDEWALK PAVEMENT AREAS ONLY.
4. INSTALL DETECTABLE PULL TAPE IN ALL EMPTY CONDUITS.
5. EVENLY APPLY TACK COAT ON FINAL BACKFILL BEFORE INSTALLING T-PATCH.
6. USE 3/8" MINUS WELL GRADED SAND.

DRAWING UPDATED DECEMBER 2018

City of West Jordan, Utah

WEST JORDAN UTAH

NEW INSTALLATION -SUBDIVISIONS DUCT BANK STANDARD

PLAN
RD270

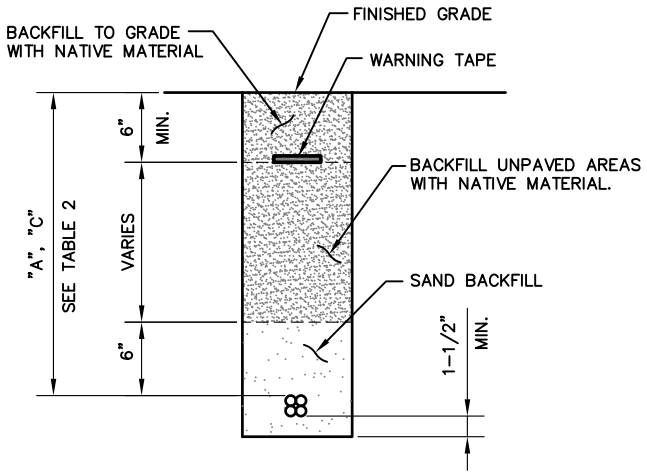

1-D MULTIDUCT CONDUIT

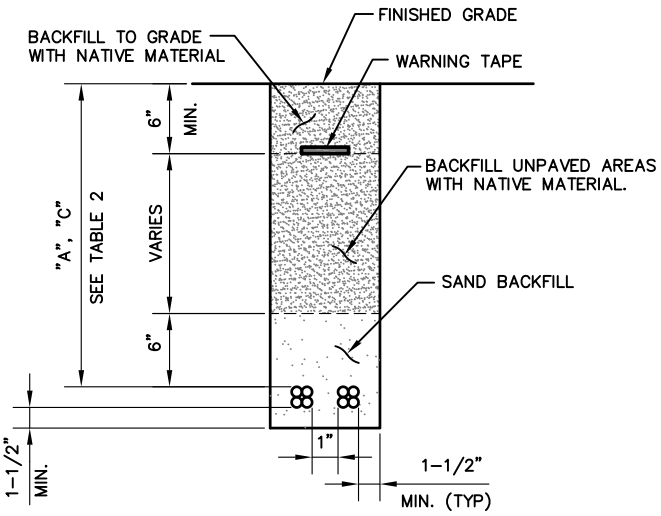

2-D MULTIDUCT CONDUIT

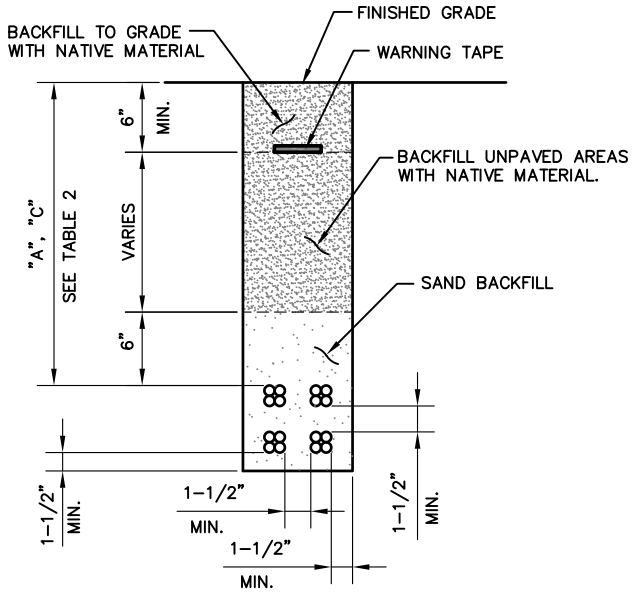

4-D MULTIDUCT CONDUIT

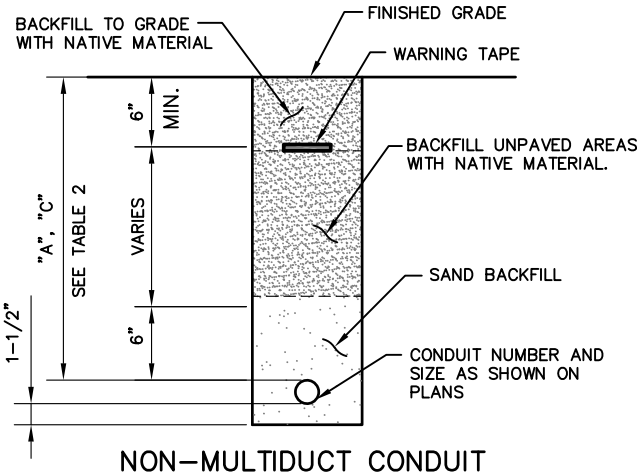

NON-MULTIDUCT CONDUIT
AND BUNDLED MICRODUCT

EXISTING ASPHALT PAVEMENT THICKNESS (T1) IN INCHES	RESTORATION T-PATCH THICKNESS IN INCHES
0-3 1/2"	3 1/2"
3 1/2"-7"	MATCH EXISTING DEPTH
7" OR GREATER	7"

	DEPTH IN INCHES	AREA
A	36	OUTSIDE 20' OF PAVEMENT EDGE
B	48	HIGHWAY ROW UNDER ASPHALT PAVEMENT SURFACE
C	60	WITHIN 20' OF PAVEMENT EDGE

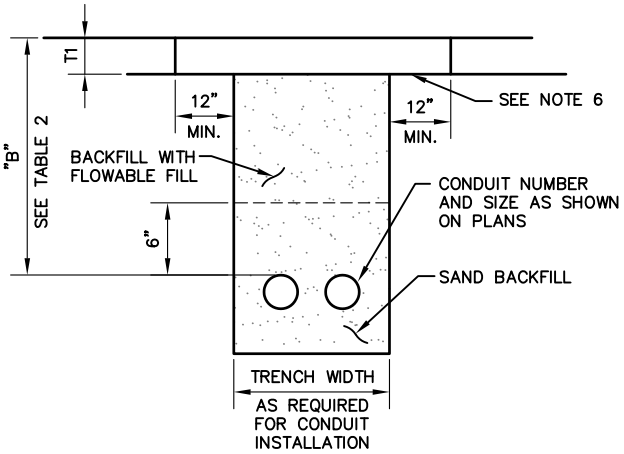

CONDUIT TRENCHED IN ASPHALT
PAVEMENT RESTORED WITH T PATCH

NOTES:

1. SAW CUT PAVEMENT EDGES APPLY A HOT POUR RUBBERIZED ASPHALT JOINT SEALANT OR APPROVED EQUAL. APPLIED AFTER PATCH IS INSTALLED.
2. USE HMA MATERIAL FOR T-PATCH USE OPEN-GRADED SURFACE COURSE FOR THE TOP 1" OF HMA FOR PATCHES GREATER THAN 12' WIDE WHERE OPEN-GRADED SURFACE COURSE EXISTS. MATCH EXISTING PAVEMENT AND CROSS-SECTION.
3. USE SAND BACKFILL AND FLOWABLE FILL WITHIN EXISTING ROADWAY, PROPOSED ROADWAY, AND SIDEWALK PAVEMENT AREAS ONLY.
4. INSTALL DETECTABLE PULL TAPE IN ALL EMPTY CONDUITS.
5. EVENLY APPLY TACK COAT ON FINAL BACKFILL BEFORE INSTALLING T-PATCH.
6. USE 3/8" MINUS WELL GRADED SAND.

DRAWING UPDATED JUNE, 2019

City of West Jordan, Utah

WEST JORDAN UTAH

NEW INSTALLATION -SUBDIVISIONS DUCT BANK STANDARD

PLAN
RD270

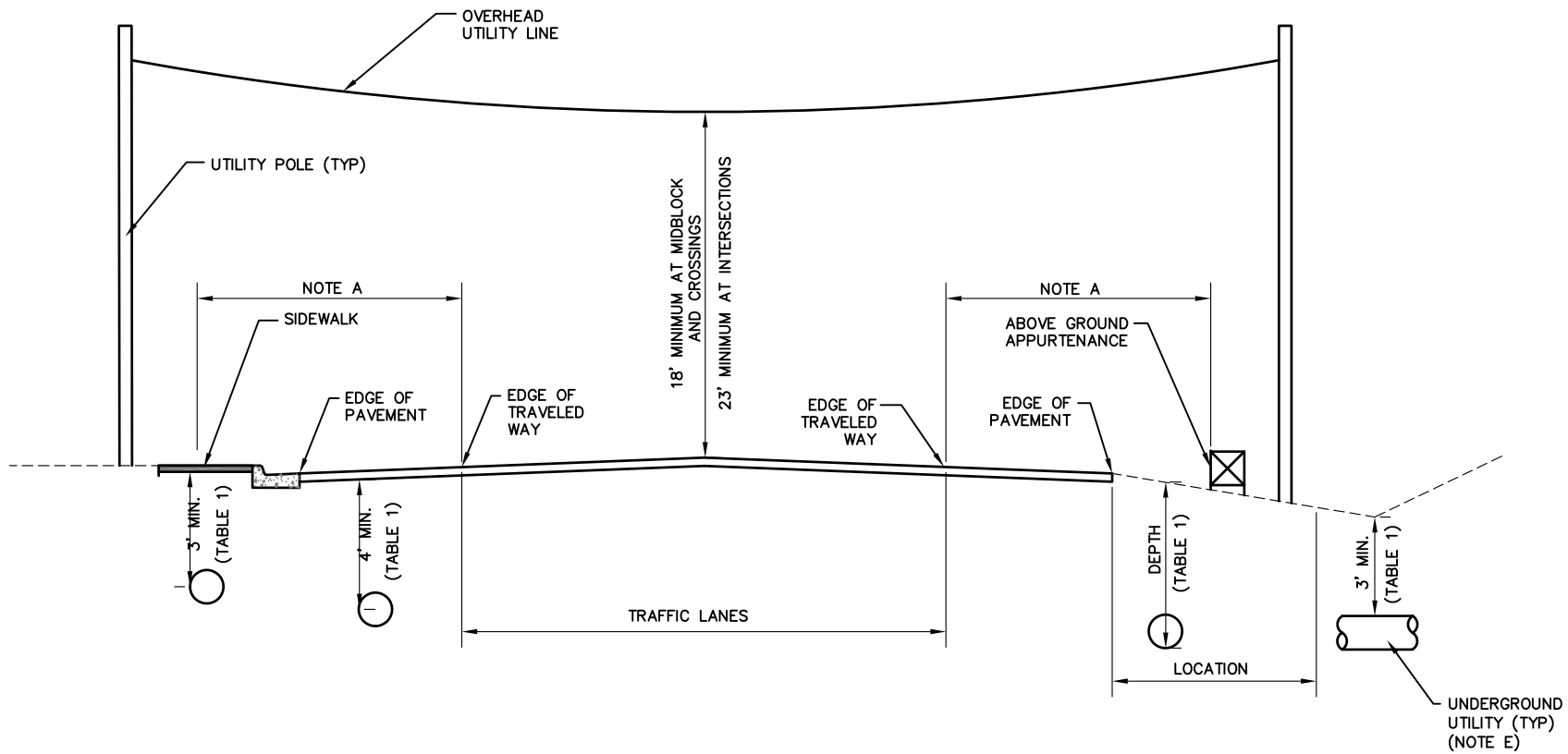

TABLE 1					
MINIMUM DEPTH OF BURY TO TOP OF UTILITY (LONGITUDINAL AND CROSSING INSTALLATIONS)					
LOCATION	UNDER PAVEMENT	UNDER SIDEWALK	UNDER DITCH (NOTE 5)	LOCATION < 20 FT FROM EDGE OF PAVEMENT	LOCATION < 20 FT FROM EDGE OF PAVEMENT
DEPTH	4 FT BELOW TOP OF PAVEMENT	3 FT BELOW TOP OF SIDEWALK	3 FT BELOW FLOWLINE	5 FT BELOW NATURAL GRADE	3 FT BELOW NATURAL GRADE

DESIGN NOTES:

A. USE THE AASHTO ROADSIDE DESIGN GUIDE FOR CLEAR ZONE REQUIREMENTS NOT SHOWN ON THIS STD DWG.

B. FOLLOW ADMINISTRATIVE RULE 930-7, UTILITY ACCOMMODATION DESIGN REQUIREMENTS.

C. MEET OR EXCEED NATIONAL ECLECTIC SAFETY CODE VERTICAL AND HORIZONTAL CLEARANCES AND OSHA WORKING CLEARANCES FOR MAINTENANCE OF DEPARTMENT FACILITIES.

D. INSTALL UTILITY CROSSINGS AS CLOSE TO PERPENDICULAR TO THE ROADWAY AS POSSIBLE.

E. AVOID LONGITUDINAL PLACEMENT OF UNDERGROUND UTILITIES DIRECTLY BENEATH DITCHES.

F. 18 FT MINIMUM CLEARANCE REQUIRED FOR ALL OVERHEAD UTILITIES WITHIN UDOT RIGHT-OF-WAY, BOTH CROSSING AND PARALLEL TO THE ROADWAY.

City of West Jordan, Utah

DRAWING UPDATED JUNE, 2019

PLAN RD273

UTILITY LOCATION REQUIREMENTS

WEST JORDAN UTAH

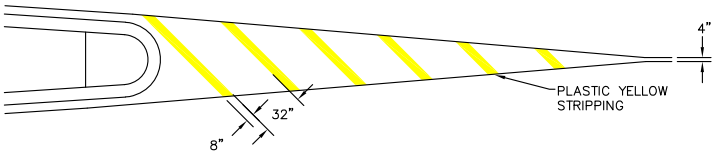

A 1 STRIPING AT PLOWABLE MEDIAN END DETAIL
SCALE: NONE

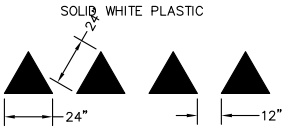

B 1 SHARKS TEETH STRIPING
SCALE: NONE

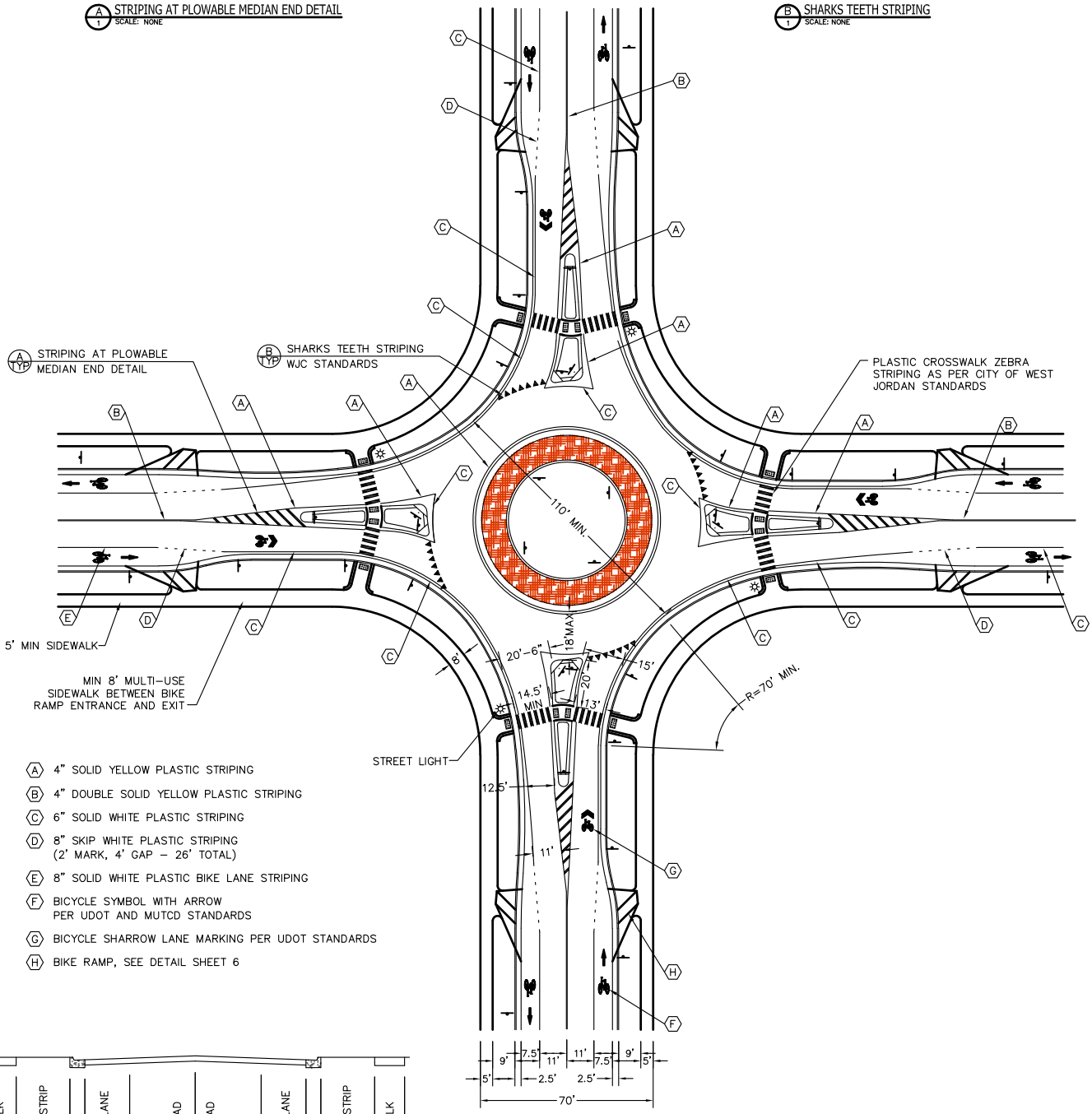

- (A) 4" SOLID YELLOW PLASTIC STRIPING
- (B) 4" DOUBLE SOLID YELLOW PLASTIC STRIPING
- (C) 6" SOLID WHITE PLASTIC STRIPING
- (D) 8" SKIP WHITE PLASTIC STRIPING (2' MARK, 4' GAP – 26' TOTAL)
- (E) 8" SOLID WHITE PLASTIC BIKE LANE STRIPING
- (F) BICYCLE SYMBOL WITH ARROW PER UDOT AND MUTCD STANDARDS
- (G) BICYCLE SHARROW LANE MARKING PER UDOT STANDARDS
- (H) BIKE RAMP, SEE DETAIL SHEET 6

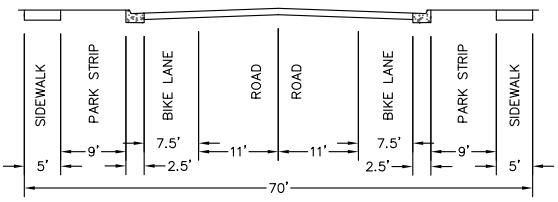

TYPICAL COLLECTOR ROAD

MANUAL OF UNIFORM TRAFFIC CONTROL DEVICES (MUTCD) RECOMMENDED DESIGN PRACTICES ADOPTED BY UDOT, WHERE APPLICABLE.

REVISED DRAWING JULY 2019

City of West Jordan, Utah

WEST JORDAN UTAH

SINGLE LANE ROUNDABOUT

TYPICAL COLLECTOR STRIPING AND GEOMETRY PLAN

PLAN

RD-290

E:\GIS\CAD\New West Jordan Standards\Road & Bridge\Modified Standards - Not yet addopted\Roundabout-8-2017\ROUNDABOUT TYP_UPDATED 8-2017.dwg, 7/18/2019 11:44:13 AM, Adobe PDF

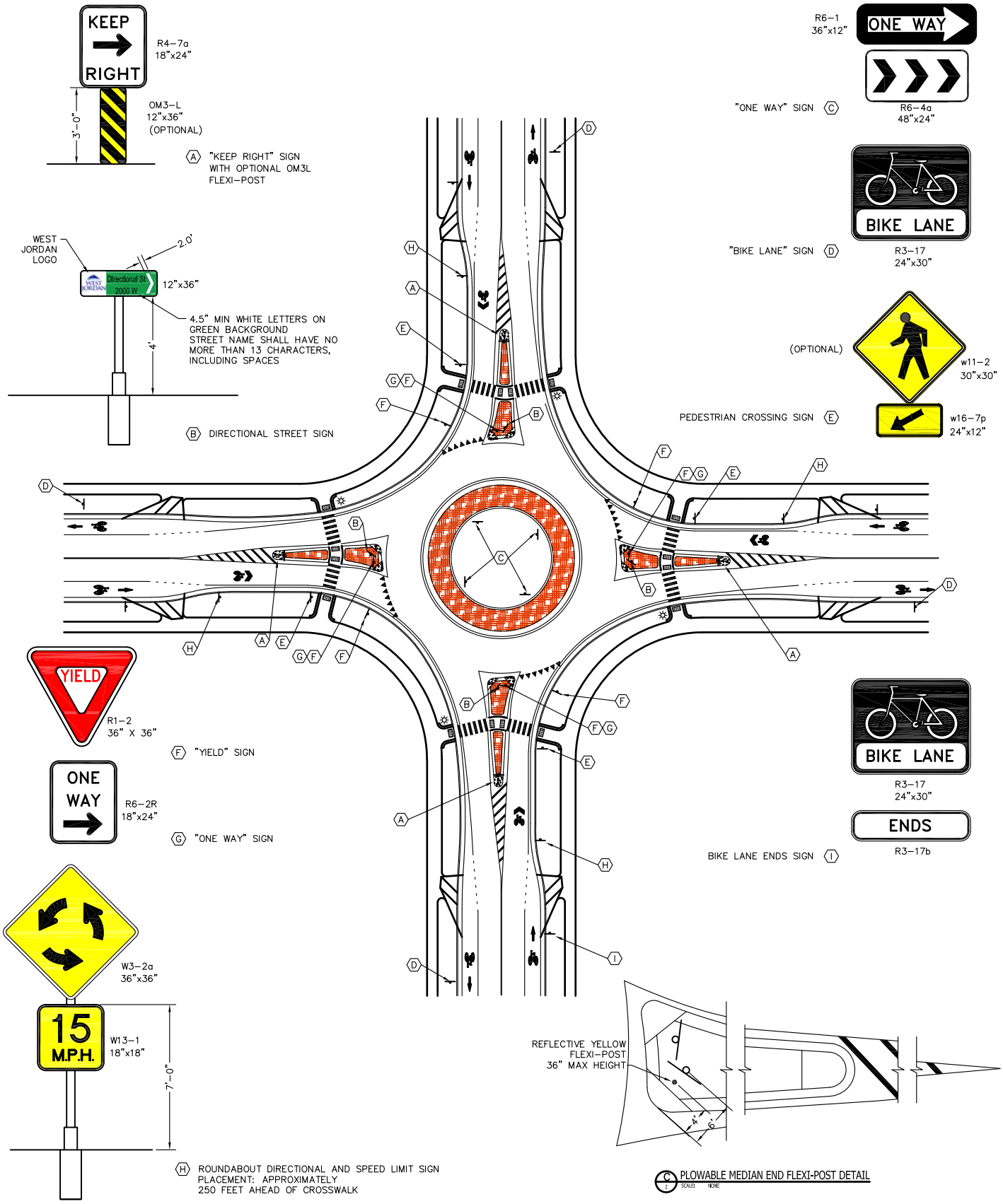

REVISED DRAWING JULY 2019

City of West Jordan, Utah

WEST JORDAN UTAH

SINGLE LANE ROUNDABOUT

TYPICAL COLLECTOR SIGNAGE PLAN

PLAN

RD-290

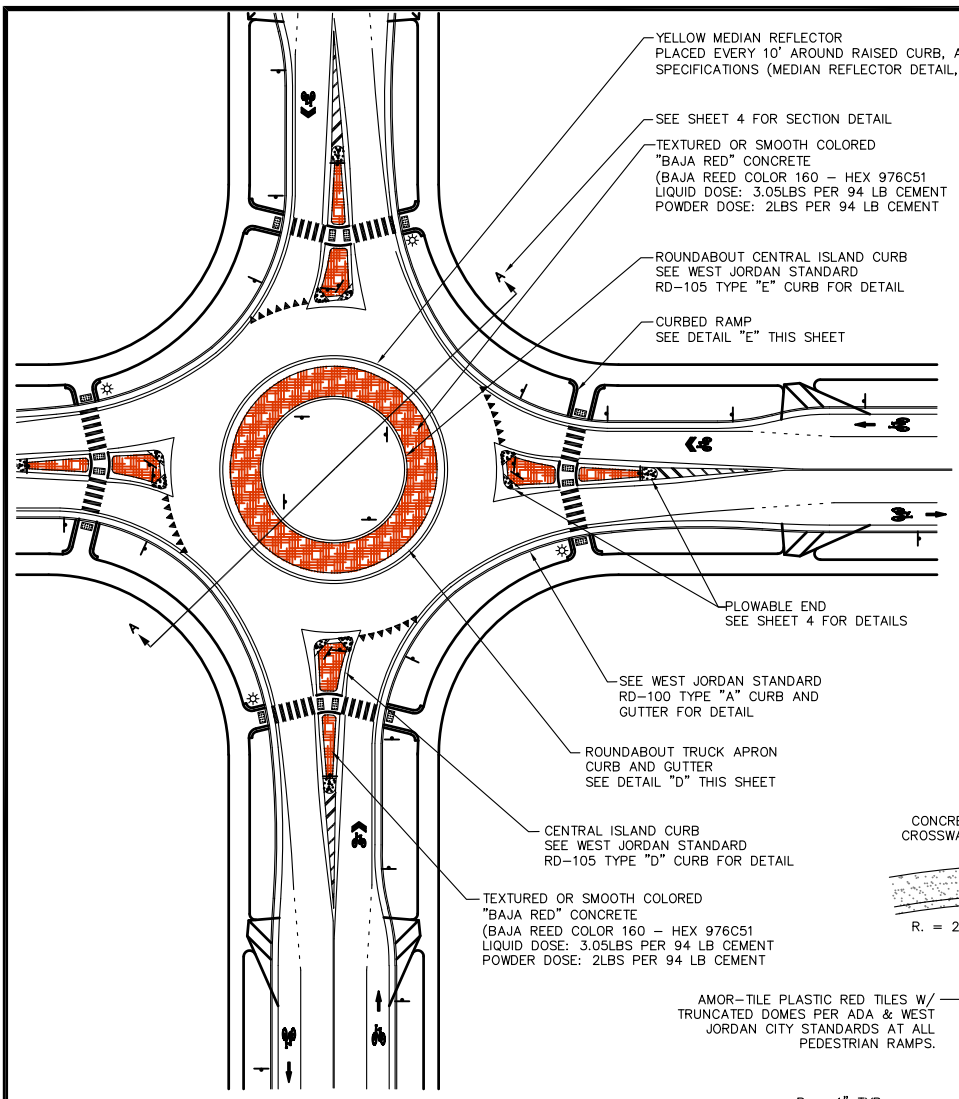

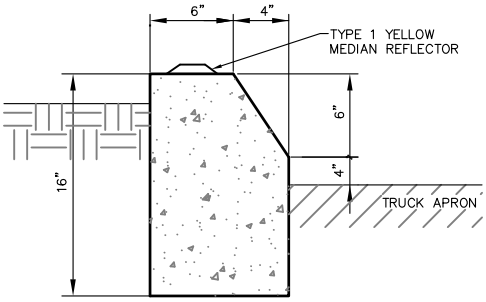

REFLECTOR LOCATION ON TYPE "E" CURB

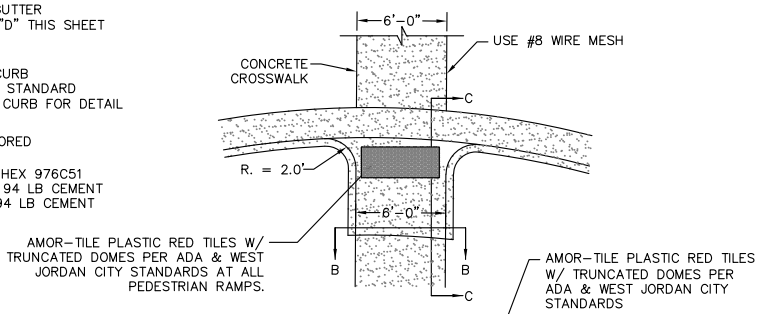

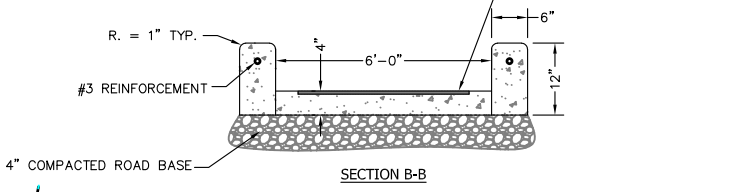

SECTION B-B

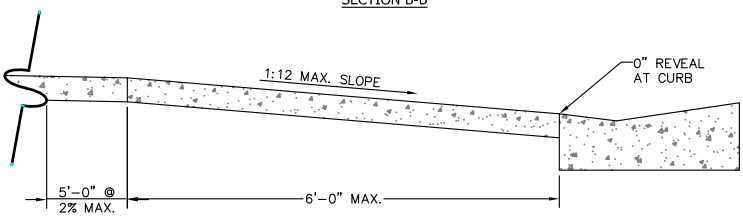

SECTION C-C

E 3 CURBED RAMP DETAILS
SCALE: NONE

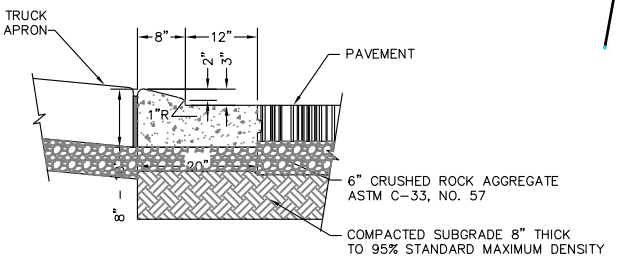

D 3 ROUNDABOUT TRUCK APRON CURB AND GUTTER
SCALE: NONE

REVISED DRAWING JULY 2019

WEST JORDAN UTAH

SINGLE LANE ROUNDABOUT

TYPICAL COLLECTOR CURB DETAILS

PLAN

RD-290

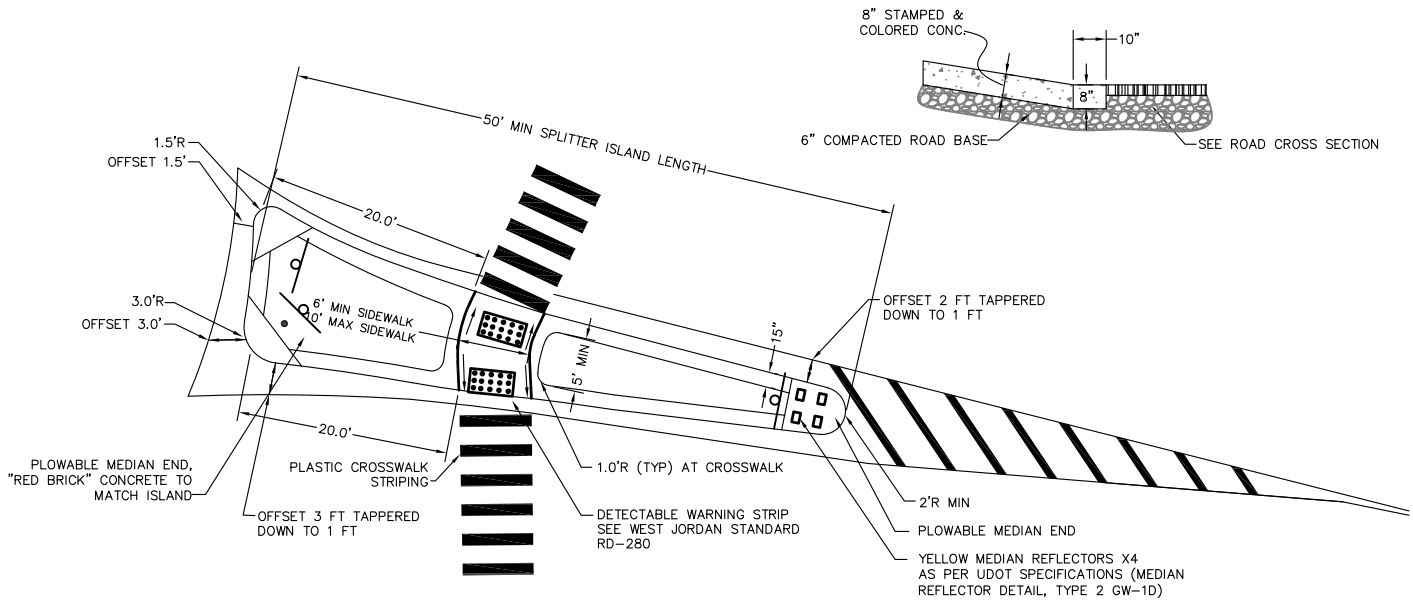

SPLITTER ISLAND CONFIGURATION

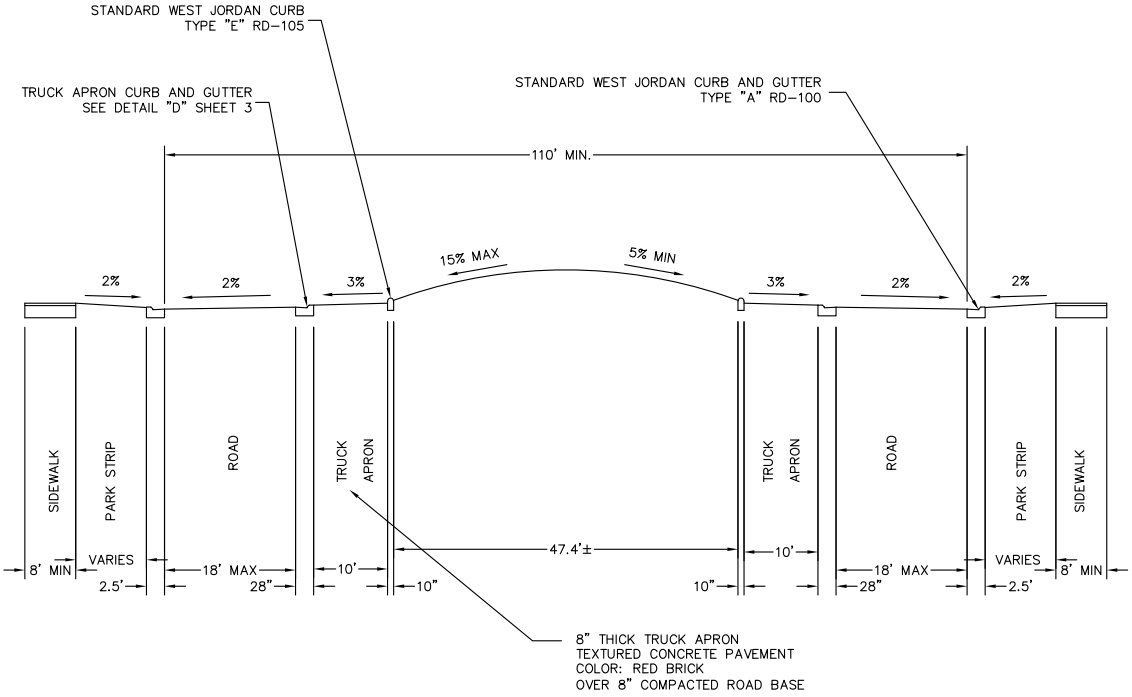

CENTRAL ISLAND SECTION A-A

REVISED DRAWING JULY 2019

WEST JORDAN UTAH

SINGLE LANE ROUNDABOUT

TYPICAL COLLECTOR

SPLITTER AND CENTER ISLAND DETAILS

PLAN

RD-290

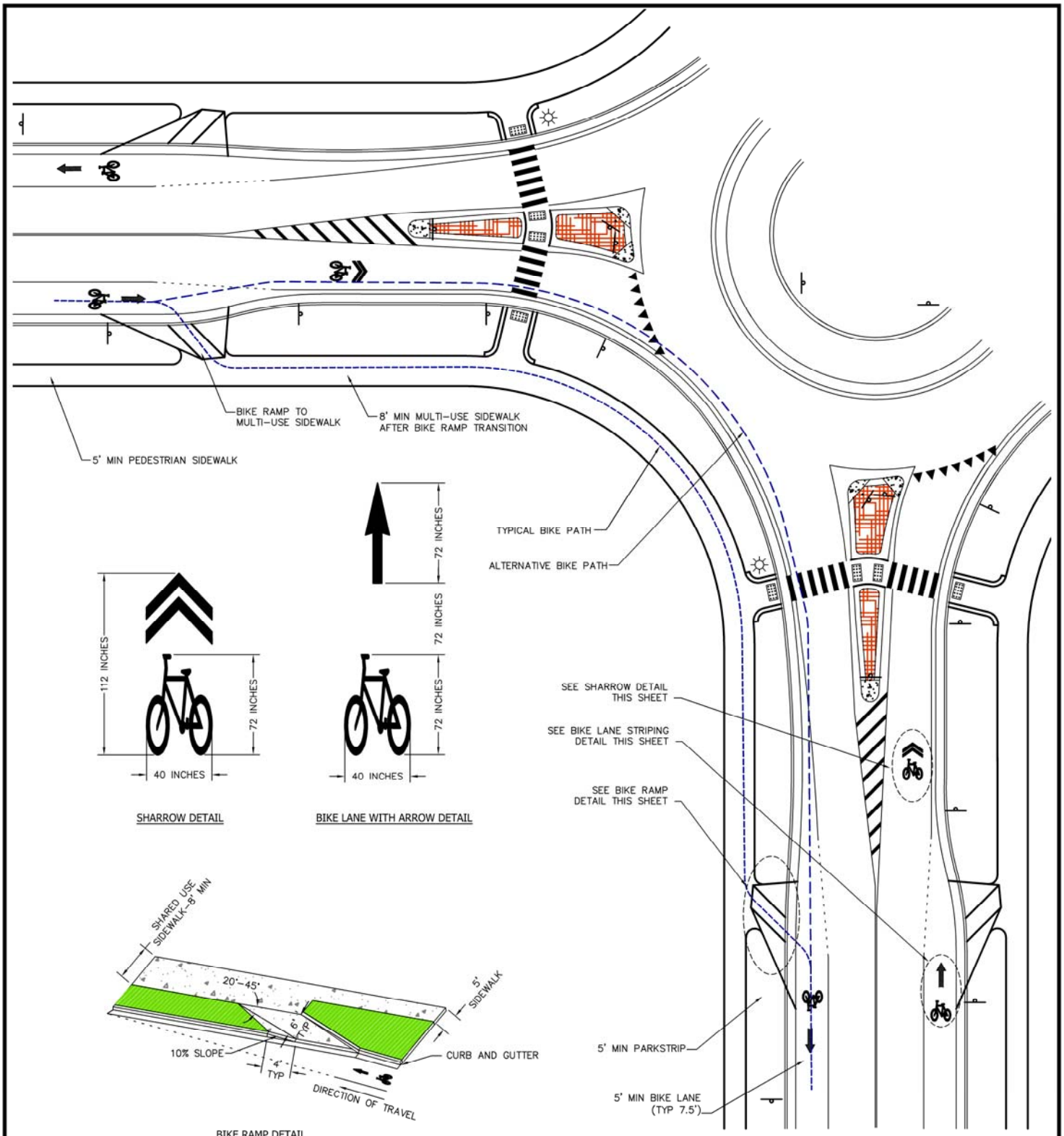

REVISED DRAWING JULY 2019

City of West Jordan, Utah

WEST JORDAN UTAH

SINGLE LANE ROUNDABOUT

TYPICAL COLLECTOR
BIKE RAMP AND LANE DETAILS

PLAN

RD-290

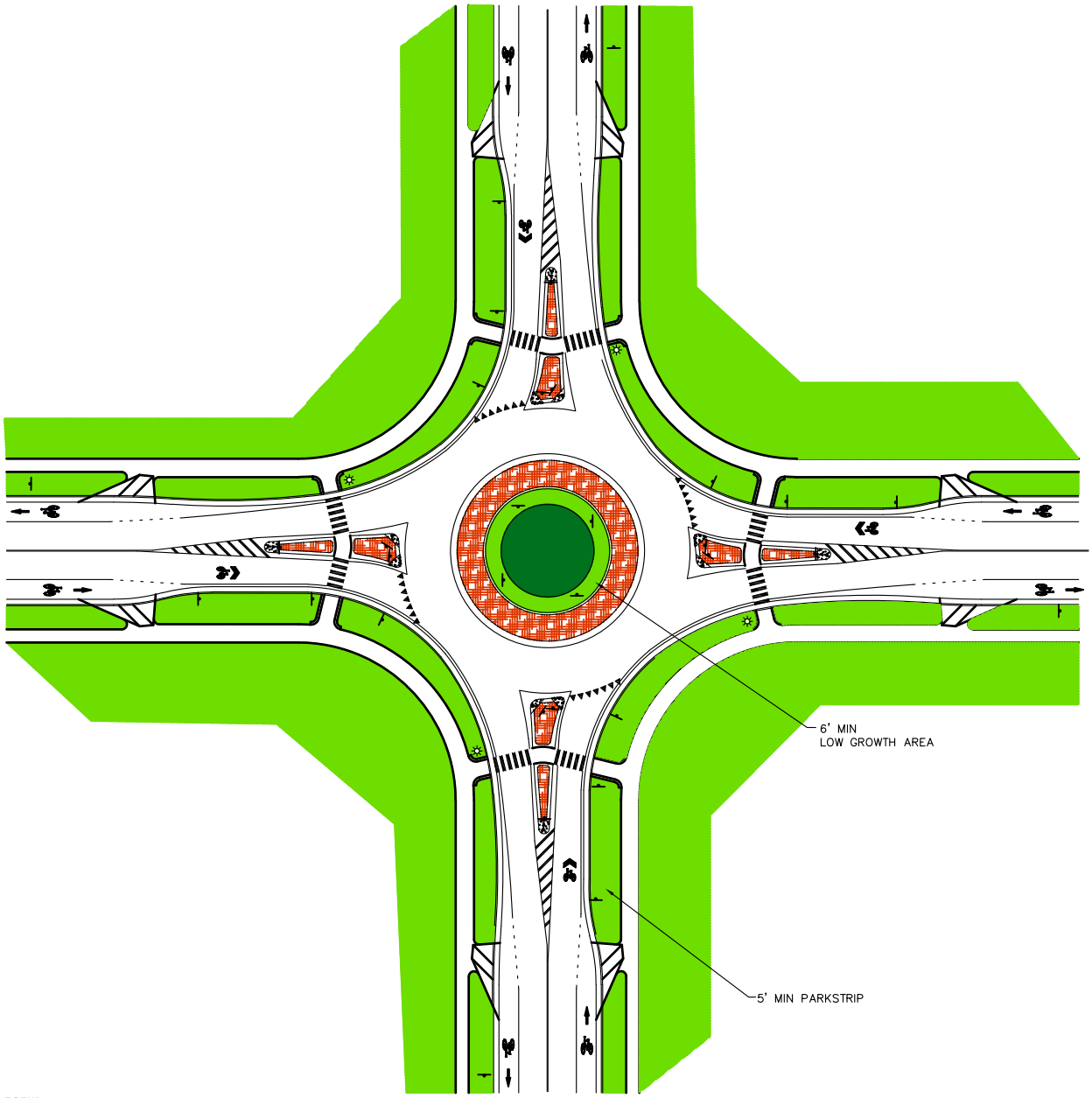

LEGEND:

- LOW GROWTH AREA (18" AND UNDER)
- HIGH GROWTH AREA (OVER 18")
- TEXTURED OR SMOOTH COLORED "RED BRICK" CONCRETE

REVISED DRAWING JULY 2019

City of West Jordan, Utah

WEST JORDAN UTAH

SINGLE LANE ROUNDABOUT

TYPICAL COLLECTOR LANDSCAPING PLAN

PLAN

RD-290